End-to-End Ozone Mapping and Profiler Suite (OMPS) Mission Data Modeling and Simulation

Angela Li, Jizhong Chen*, Gary Smith,
Lesyle Boyce, Christopher Roberts
NASA Goddard Space Flight Center, Software Engineering Division, Mail Code 474.0
*Columbus Technologies and Services

Pending NASA Code 500 Review

Benefits

- Requirements traceability to design, code and test in integrated environment
- Consistent architecture, design, code and documentation of both Flight and Ground Software Subsystems
  - Reverse engineer C, C++ or Java code for capturing existing Flight and Ground systems developed without a standardized methodology
- Facilitates automated Verification and Validation(V&V) and gap analysis through the use of model checking tools

Benefits (Continued…)

- Full behavioral code generation for C, C++ and Java applications targeting real-time operating systems
- Interface Definition and Management
  - System -to- System and External Interfaces
  - Verification of information flow between key Interfaces
- SysML provides flexible allocation tables that supports requirements allocation, functional allocation, and structural allocation
- SysML provides linkage with DoDAF, MODAF or UPDM support

JPSS Context Diagram

March 2, 2011

JPSS Program

JPSS Flight Projects

- JPSS-1
- JPSS-2
- Free Flyer
  - TSIS FF
- Services FF
  - SARSAT
  - A-DCS

- NPP (Instruments)

JPSS Ground Project

- Flight Operations –
  NPP, JPSS, DWSS, Free Flyer
- Data Acquisition Product Generation and Distribution
  NPP, JPSS, DWSS, GCOM, Free Flyer
- Data Acquisition and Routing Only
  DMSP, METOP, WINDSAT

Cross Support Flight Segment

- DMSG – DMSP-x
- JAXA – GCOM-x
- EUMETSAT – METOP-x
- DMSG – DWSS-x
- NRL – WINDSAT
- NASA – NPP

Cross Support Ground Systems

- JAXA Ops
- EUMETSAT Ops
- AFSCN

External NOAA Organizations

- OSPO
- STAR
- Climate Service
- OSD
- NWS

Customers

- IDPS Consumers – *AFWA, FNMOC, NAVO, NESDIS/NDE, CLASS*
  - *National Weather Service, USDA, EPA, Agriculture, Fisheries, DoD Branches of Service etc.*
- Direct Readout Consumers – *Civilian, Military, Int'l*
- Search and Rescue

External NASA Organizations

- Launch Services Program (LSP)
- Near Earth Network (NEN)
- Space Network (SN)
- Flight Dynamics Facility (FDF)
- NASA Science Data Segment (SDS) - NPP Only
- LaRC for CERES Development

JPSS Ground System Operational Flows OV-1

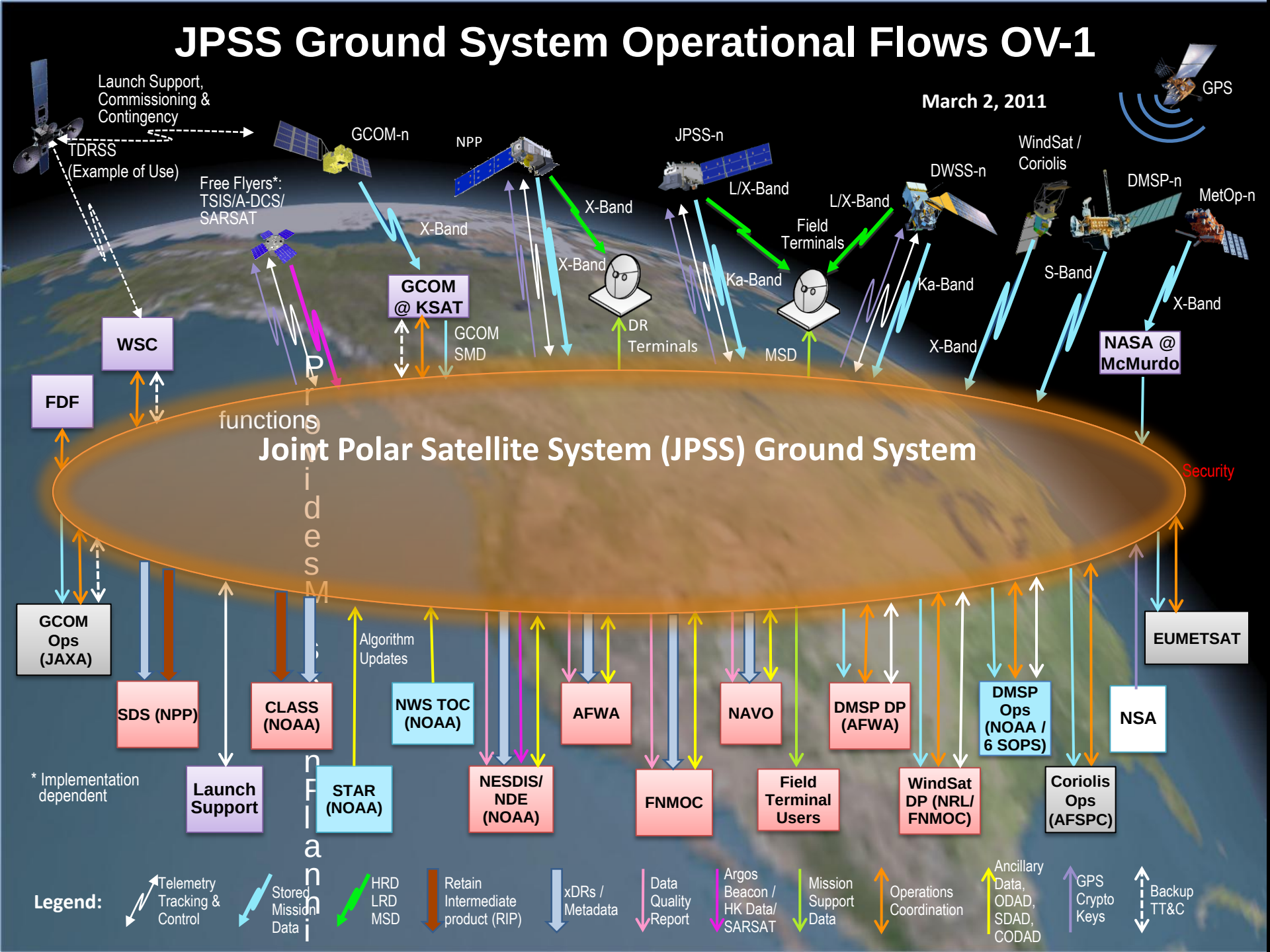

Mission Data Formats

- The Consultative Committee for Space Data Systems (CCSDS) Packet
- Multiplexing Protocol Data Unit (MPDU)
- Coded Virtual Channel Data Unit (CVCDU)
- Channel Access Data Unit (CADU)
- Raw Data Record (RDR)
- Science Data Record (SDR)
- Environmental Data Record (EDR)
- Intermediate Product (IP)

OMPS Total Column Data Flow

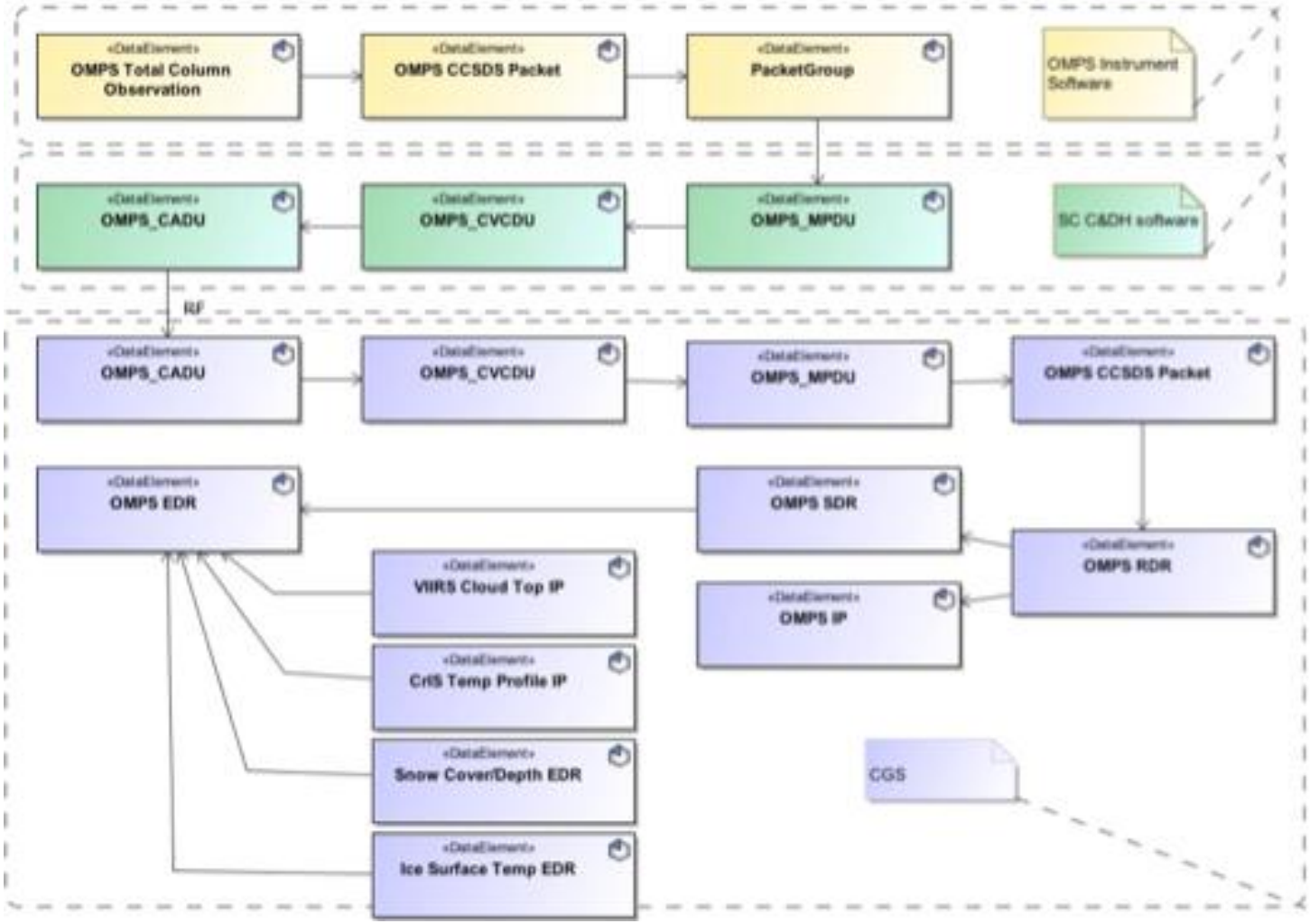

Strategies

- Rapid prototyping of behavioral model
  - Enable early proof of concept and requirement verification and validatin
- Leverages NASA reusable assets to rapidly create executable models
  - Provides simulation of the runtime environments
  - Verify adequacy of real-time performance requirements
- Provides capability for early detection and isolation of potential data flow bottleneck
  - Providing a model view of the system that is scalable to simulate worst case demand loading

Strategies (Continued…)

- Document the format and timing of information flows between systems and/or subsystems in standardized graphical format
  - Provide automated interface-to-interface verification and validation
- Support subsystem testing and verification
  - By providing high fidelity modeling of external stimulus to the unit-under-test in a controlled environment

Approaches

- Flight Vehicle Test Suite (FVTS)
  - Hardware based Engineering Model (EM) class
  - Software or COTS hardware based Operations (OPS) class
- End-to-End Data Modeling
  - Capture data format change from CCSDS packet to CADU
  - Use UML tools
  - Generate code for simulation
  - Verify the FVTS simulation results independently
  - Object Oriented (OO) model
    - Easy to extend
  - Data driven simulation

OMPS Class Diagram

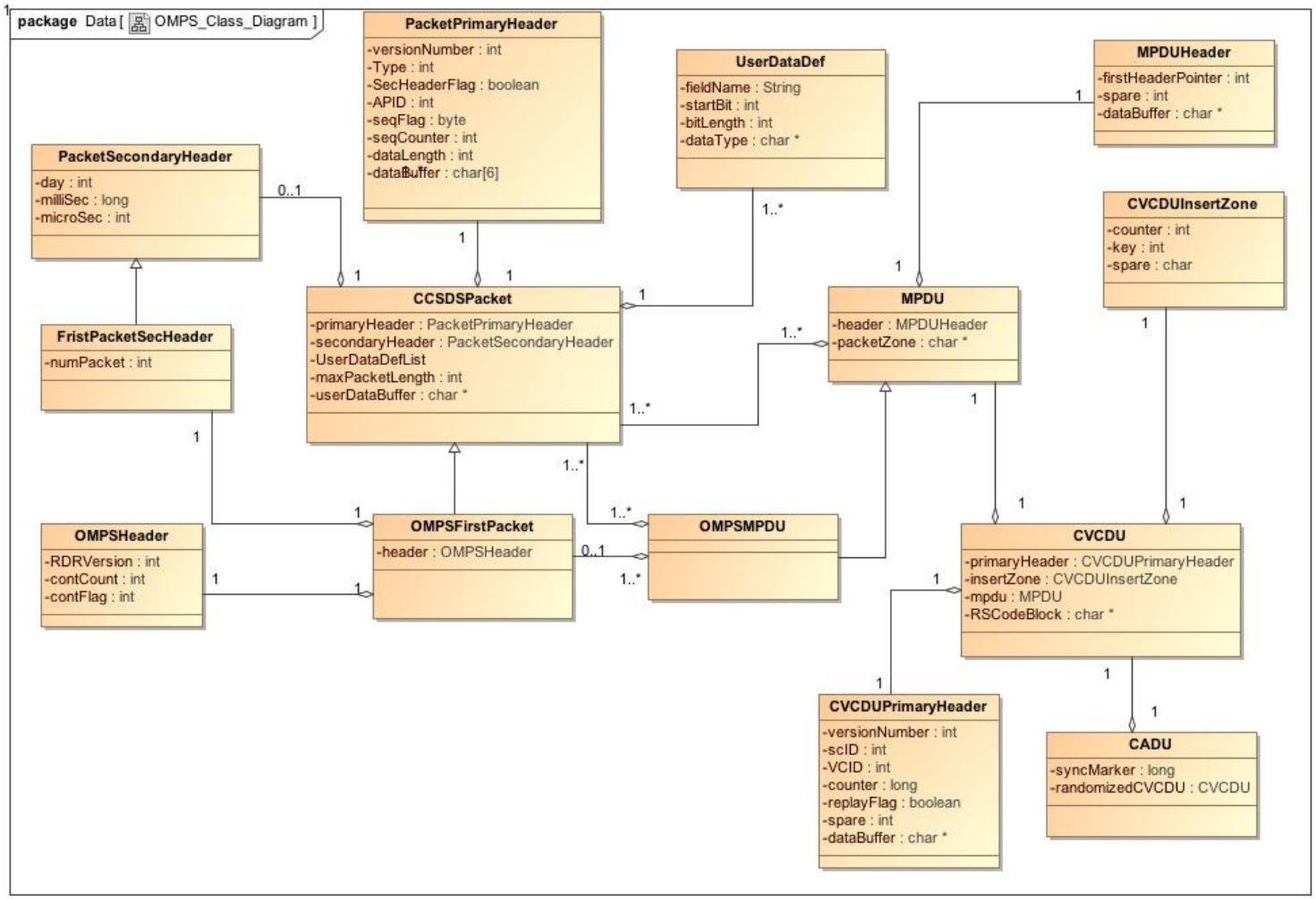

OMPS Sequence Diagram

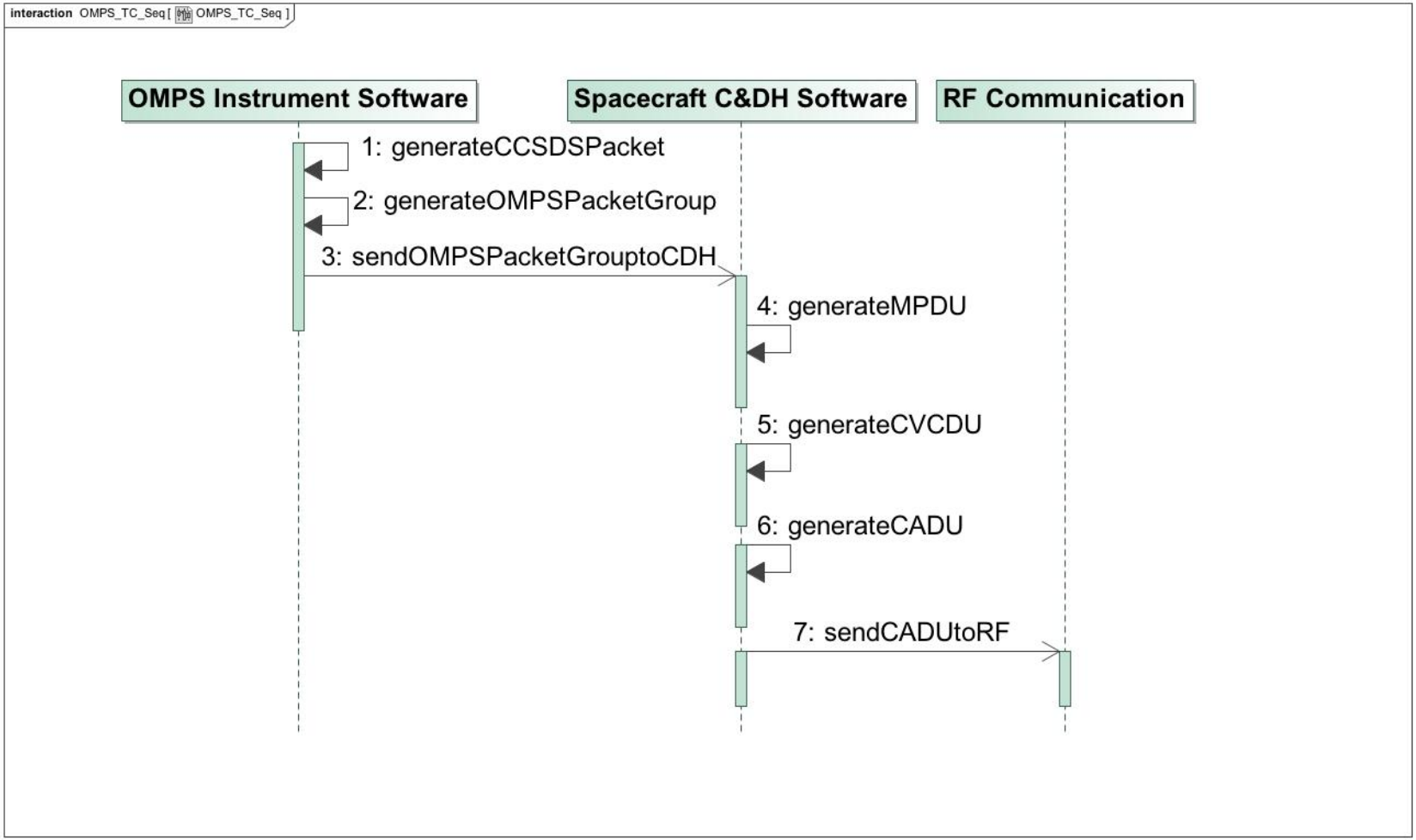

Path Forward

- Integrate the model with an XML Parser
- Initialize the model with real OMPS science RDR files – Done
- Run the Simulation from Packet to CADU
- Make the model simulation data driven
- Run simulation side-by-side with FVTS
- Or feed the simulation data into FVTS

Summary

- OMPS End-to-end Data Modeling provide us a clear, visual way to understand mission science data format
- The Simulation capability of the data model provide us a way to inject real science data into FVTS
- The object oriented nature of the model is very easy to be extended to any instrument, any data product, including:
  - Spacecraft house keeping
  - Instrument calibration

Acknowledgement

- Holly Abraham – Columbus Technologies and Services
- Brett Mathews - Columbus Technologies and Services
- Larry Barrett – Orbital Science Corp.
- Richard Cember – Computational Physics Inc.
- Timothy Dorman – Computational Physics Inc.