Cryogenics 52 (2012) 183–187

Contents lists available at SciVerse ScienceDirect

Cryogenics

journal homepage: www.elsevier.com/locate/cryogenics

Life testing of the ABI cryocooler: Two years complete ☆

Perry G. Ramsey *, Kirsten S. Swanson [1]

ITT Geospatial Systems, 1919 W. Cook Road, PO Box 3700, Fort Wayne, IN 46801, United States

ARTICLE INFO

Article history:
Available online 20 January 2012

Keywords:
Cryocooler
Life test
HEC

ABSTRACT

The Advanced Baseline Imager (ABI) is a prime payload for the GOES-R (Geostationary Operational Environmental Spacecraft) series of meteorological satellites. Focal plane temperature control is provided by a two-stage cryocooler based on the NGAS HEC (Northrop Grumman Aerospace Systems High Efficiency Cryocooler) design. To demonstrate the long-term operation of this cooler, a dedicated life test is being performed. The life test cooler is close to the flight design, differing only in minor details of the cold head structure. The test concept simulates continuous operation the cooler at flight like conditions. Long term testing started on 12 June 2009, and has continued to this date. Test performance and anomalies are discussed.

© 2012 Elsevier Ltd. All rights reserved.

1. Introduction

The Advanced Baseline Imager (ABI) is a prime payload for the GOES-R (Geostationary Operational Environmental Spacecraft) series of meteorological satellites. This is the first use of an active cryocooler in an operational (as opposed to scientific) satellite. The mission assurance plan calls for a 10 year life test on the cryocooler design, with 5 years being completed before first launch.

This article covers initial testing of the life test cryocooler. As of the date of preparation the cooler has been under test for 20 months.

2. Materials and methods

2.1. Unit Under Test

The Unit Under Test (UUT) is derived from the Northrop-Grumman Aerospace Systems (NGAS) High Efficiency Cryocooler (HEC). Prototype flight units were described in Colbert et al. [1] and Ramsey et al. [2]. A representative unit is depicted in Fig. 1. The main unit, depicted on the left side of Fig. 1, is composed of a compressor with an integral linear pulse tube cold head. This side of the cooler consumes the bulk of the work produced by the compressor, and is used to generate the lowest temperature. A tap on the compressor feeds a second cooler through a transfer line. This is the remote cooler, depicted on the right side of Fig. 1. The remote cooler has its own expansion volume, and uses a coaxial cold head.

The compressor is driven by a dual voice coil-type linear motor. The motor is driven by a complex AC waveform, containing the fundamental frequency and higher harmonics. The basic power is set by magnitude of the fundamental; harmonics are added to provide vibration control.

Temperature control is provided at the integral cold head through a feedback control system that varies the driving waveform of the compressor to modulate the amount of cooling. The remote cooler is not directly temperature controlled. The compressor input power is modulated to control the temperature of the integral cold head, and a fraction of the work produced is delivered to the remote. This fraction is not constant; it is observed [2] that a colder remote draws a greater fraction of the total compressor work.

The ABI procurement specifications call for 2.27 W of cooling at 53 K at the integral cold head and 5.14 W at 183.1 K at the remote cold head. In the test setup, these fixed loads are imposed on each cold head. The control system modulates the compressor to achieve the integral temperatures, and the remote temperature floats in response.

The only significant difference between this unit and the flight units is the thickness of the remote pulse tube wall. The ABI flight units have a slightly thicker wall to withstand higher flight structural loads. This change imposes a small (<100 mW) additional load on the flight coolers.

2.2. Test support equipment

Operating the life test requires (1) a vacuum environment, (2) powering and controlling the cooler, (3) test telemetry and

☆ This document is not subject to the controls of the International Traffic in Arms Regulations (ITAR) or the Export Administration Regulations (EAR). However, this information may be restricted from transfer to various embargoed countries under US laws and regulations.

* Corresponding author. Tel.: +1 260 451 1093; fax: +1 260 451 6033.
E-mail addresses: perry.ramsey@exelisinc.com (P.G. Ramsey), kirsten.swanson@exelisinc.com (K.S. Swanson).
[1] Tel.: +1 260 451 6232; fax: +1 260 451 6033.

0011-2275/$ - see front matter © 2012 Elsevier Ltd. All rights reserved.
doi:10.1016/j.cryogenics.2012.01.021

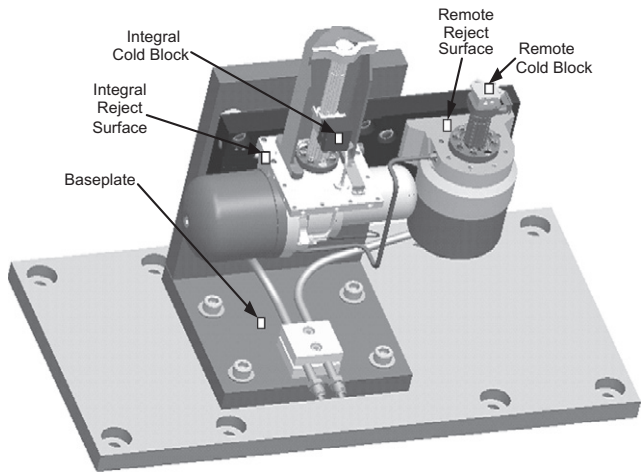

Fig. 1. Unit Under Test, plus support equipment installed in vacuum chamber.

monitoring, (4) simulated heat loads at the cold heads, and (5) waste heat removal.

The UUT is mounted in a horizontal cylinder vacuum chamber approximately 1.2 m in diameter and 1.2 m long. Vacuum levels below 1×10^{-6} torr are typical. The cooler has shared the chamber with a bearing life test since December 2010.

The cooler is mounted to a fixture that holds the cooler in "fingers up" orientation, placing the compressor below the cold heads. This produces the most flight-like loads on the linear cold head by putting the regenerator below the pulse tube. This puts the cold end of the pulse tube at the bottom, which eliminates internal heat leaks due to natural convection.

The cooler is powered through a cryocooler support rack supplied by NGAS. This unit provides the functionality of a flight cryocooler control electronics box. The control unit provides the driving waveform for the cooler, temperature control, vibration control, fault protection, and returns the full set of telemetry that is available from the flight cooler. The rack also contains power supplies and an off the shelf computer for interfacing with the control electronics and other peripheral power supplies and data loggers. Because the control electronics produces a complex AC waveform, the rack includes a Valhalla 2400 Harmonic Power Analyzer to accurately measure the power delivered to the compressor. In this paper, the power for a single motor coil is reported, as determined by the Valhalla meter. The other coil draws about the same power, so total compressor power is approximately twice the reported value.

Heat loads are delivered to the coldheads using copper blocks with resistive heaters. Heaters are powered by an Amrel PD 120 DC power supply. A Lakeshore 218 is used to monitor eight PRTs and to control the cold head heaters, including alarms and fault protection. PRTs are located as described in Table 1. Only the first eight are read by the controller. PRT-9 is included for redundancy; wiring external to the vacuum chamber would be changed in case of a failure of PRT-8. There is also a pair of flight PRTs (primary and redundant) attached directly to the integral cold head, which is returned through the cryocooler telemetry stream. Remote cold head temperature is only measured at the attached heater block.

Table 1
Temperature telemetry and location.

Sensor	Location
PRT-1	Integral cold block (primary)
PRT-2	Integral cold block (redundant)
PRT-3	Remote cold block (primary)
PRT-4	Remote cold block (redundant)
PRT-5	Compressor heat rejection surface
PRT-6	Remote heat rejection surface
PRT-7	Integral cold head orifice block
PRT-8	Cold plate (primary)
PRT-9	Cold plate (redundant)

Cooling is provided by a Neslab ThermoScientific Thermoflex 1400 chiller/circulator. The working fluid is a 50/50 mixture of an off-the-shelf propylene glycol coolant and water. Cold plates are attached to the cryocoolers at their standard heat rejection surfaces. Coolant flow is through the integral cold plate first, followed by the remote cold plate. A separate test also uses the circulator fluid for cooling, downstream of the cryocooler.

2.3. Test procedures

Prior to long term thermal testing, the UUT was put through vibration and thermal cycling tests. Before each test, a thermodynamic performance measurement was made in vacuum.

2.3.1. Initial thermal performance

The baseline performance test for the cooler is a load line. The compressor power required to drive the cooler to spec levels of temperature and heat load is determined. Only the integral cold head is controlled; the remote cold head temperature floats to the temperature that is in equilibrium with the loads applied. The power required to hold this condition is recorded. The set point is then changed to 32 K and the cold tip heaters are turned off. The cooler will never reach 32 K even with no load, which causes the cooler to operate at its maximum allowable power level, which is a user-settable parameter. The maximum power level of the cooler is adjusted as required so the power consumed matches the level observed in the first part of the test. This test is used as a standard health check on the cooler. It was run as part of cooler acceptance at NGAS, and it is repeated periodically to check the baseline cooler performance.

2.3.2. Vibration testing

The cryocooler was subjected to a random vibration test at levels reflecting predicted launch loads. At the completion of the random test the thermal performance test was repeated.

2.3.3. Thermal cycling

The cryocooler was then put through 25 cycles over a range of −30 to +60 °C. The test was run in an ambient atmosphere in a Thermotron 2800 thermal test chamber with nitrogen purge to prevent condensation. The chamber ramp rate was 1.5 °C/min. Thermocouples were attached to the cooler at the integral cold block, integral reject surface, remote cold block, remote reject surface, and support baseplate. For the first cycle, the chamber was held at the maximum temperature, in order to determine the soak time required for the cooler to reach the test temperature. Similarly, the stabilization time at minimum was also determined. The times were used to set up the controller for automatic execution of the subsequent 24 cycles, with a 2 h cold soak at each plateau.

2.3.4. Long term thermal testing

The cooler was installed in the life test chamber and the thermal performance test was repeated. The long term thermal test followed immediately, beginning on June 12, 2009. The cooler was set to control to the specification temperature on the integral and loads applied to the integral and remote cold heads.

Since this is a long term test, 100% up time is not expected. In the event of cryocooler shut down the cause is evaluated. The cooler is re-started when is deemed safe to continue.

After approximately 1 year of operation (June 26, 2010) the baseline thermal performance test was repeated. Some additional

testing at intermediate values was added to more thoroughly characterize the cooler.

The cooler was returned to normal operation after the annual test and has continued to be operated. An annual performance check is expected to be performed for the duration of the test. The test goal is to simulate 10 years (87,660 h) of on-orbit operation.

3. Results

3.1. Thermal performance tests

Four load line thermal performance tests were run prior to initial start of the test: acceptance test at NGAS, initial test at ITT before vibration testing, pre-cycling, and when installed into the thermal chamber for long term operation. A fifth test was performed at the first annual check in June 2010. These are summarized in Table 2. In general, the thermal performance is similar at all tests. Differences in results are considered to be within the limits of repeatability of the measurement method, i.e. they show no consistent change in performance.

A notable inconsistency is the test done prior to thermal cycling ("Pre-Cycle 2009"). The compressor power is 8 W lower than in the other tests. On closer examination it was found that the system was not allowed adequate time to stabilize while measuring the power at specification loads prior to moving onto the next step of the procedure. The remote cold head was still cooling down when the point was declared complete. Since a warmer remote draws a lower fraction of the total compressor work, the overall system power was lower than it would have been had the test been allowed to run to equilibrium.

Another way to show the interaction between the two sides of a two stage cooler is a "window pane" plot. This plot tests the cooler at all combinations of maximum and zero power on each of the two cold heads at constant power. Collection of these points was part of acceptance testing on this cooler at NGAS, and the measurements were repeated during the first annual check. Power was nearly the same in these two tests, 123.9 W for the NGAS test and 122.6 W for the ITT test. Fig. 2 is a combination of ITT and NGST data collected for the active cooler at a reject temperature of 300 K. The cold head temperatures are slightly higher on all counts in the ITT test. The warmer remote temperatures are possibly due to the change in sensor position. In the NGAS test there was a temperature sensing diode directly on the remote cold head, while for the ITT test the sensor is a PRT on the heater block that is attached to the cold head. The sensor measures slightly higher temperatures due to temperature drops across the block and bolted interface.

3.2. Long term operation

Side A compressor motor power as a function of time for the first 160 days of the test is shown in Fig. 3. These data have been filtered to eliminate off periods and power ramp ups during restarts. This is approximately one-half of the total compressor power. Initial Side A power was approximately 63 W, rising to approximately 67.5 W over the following 40 days. During normal operation the integral cold head remained stable, within 0.050 K of its set point of 53 K. Since the remote cold head is not directly controlled it fluctuates somewhat during operation. The in-flight application uses a control heater to stabilize the components that are cooled by the remote.

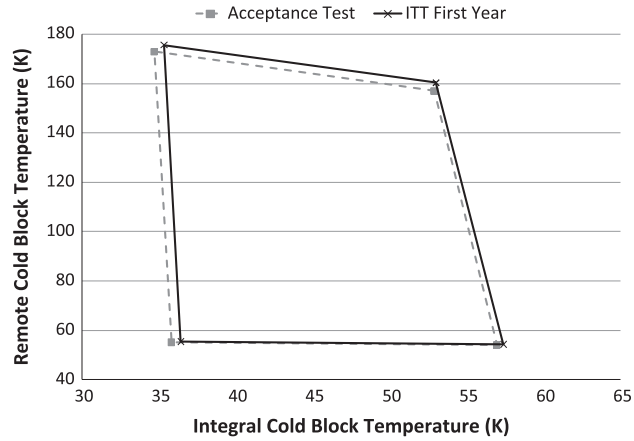

Fig. 2. Window pane plot from acceptance test and 1 year check. Total compressor power approximately 123 W.

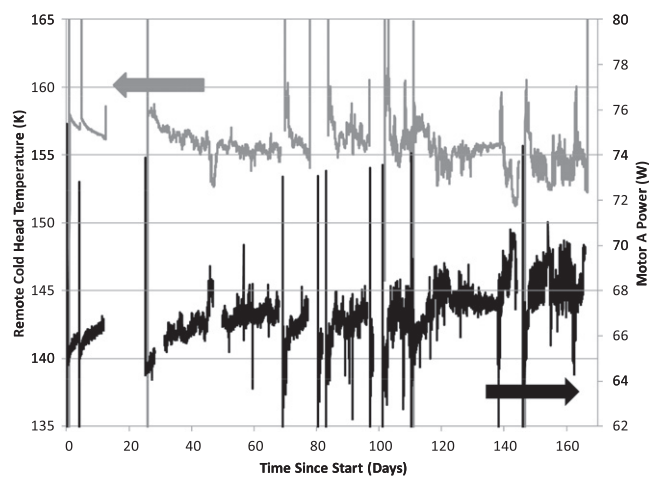

Fig. 3. Side A motor power and remote cold head temperature show generally stable operation after initial increases. Cold head temperature is upper series, left hand axis, motor power is lower series, right hand axis.

Table 2
Summary of load line performance tests to date.

Test	Integral load (W)	Remote load (W)	Integral temperature (K)	Remote temperature (K)	Motor power (W)	Reject temperature (K)
NGST Pre-ship	0	0	35.79	55.15	123.90	299.8
	2.275	5.25	52.90	157.03	124.30	299.9
Pre-vibe (2009)	0	0	36.30	54.50	123.10	299.5
	2.27	5.24	53.00	156.52	124.04	300.3
Pre-cycling (2009)	0	0	35.47	55.03	115.38	299.0
	2.27	5.24	53.00	172.00	115.81	299.5
Initial start (2009)	0	0	36.04	55.06	121.66	299.4
	2.27	5.24	53.01	157.79	122.31	300.2
Annual check (2010)	0	0	36.41	55.44	122.11	301.0
	2.27	5.24	53.00	160.31	122.60	301.7

The cooler safed itself 3 days after startup due to a vibration overload trip, resulting in both cold heads returning to room temperature. After an investigation of the event the cooler was restarted. The initial power was approximately the same as at the beginning of the test, again rising to about 67.5 W after a few weeks. This happened again several times in the following weeks, typically going through the same progression. This variation is believed to be due to water ice accumulating on the cold head or in the blankets. The ice increases the effective emittance of the insulation system, allowing more heat leak into the cold head. The control system responds by raising the power levels as required to hold the cold head temperature constant. When the cooler turns off, the frost sublimates, and the performance of the insulation system returns to its original value.

Fig. 4 shows a time series of Motor A power through the date of this writing, as a function of days since test start. Compared to Fig. 3 it appears quite noisy. Low power periods (i.e. restarts) have not been filtered out of this chart, so the shutdowns are more apparent. The extended periods of time without data at approximately 170 and 200 days were extended shutdown periods for the weeks of Thanksgiving and Christmas/New Years 2009. The shut down near 530 days was for installation of the bearing test in the chamber. The pattern of power increase with time seen in Fig. 3 is repeated many times in Fig. 4. After an extended shut down, the power starts low, then increases with the amount of time spent cold.

As of April 27, 2011, the cooler has achieved a total run time of 14,072 h, equivalent to 1.61 years. This represents a total up time of 86%. Since June of 2010, total up time has been 94.5%. At that rate we expect to complete 5 years of operation late in 2014, 10 years of operation in early 2020.

3.3. Anomalies

3.3.1. Trips

Since the beginning of the test on June 12, 2009, a total of 42 safing events have occurred. Forty of the forty-two trips were due to vibration overload trips. These trips are a result of the cooler sensing excessive vibration loads over a short period. These are ordinarily due to shock events; this response is a built in feature of the cooler to protect itself from potential damage. The remaining two trips were caused by a power outage and the accidental disconnection of a cable.

As shown in Fig. 5, all trips have occurred on weekdays. One interesting cluster is early Wednesday mornings. Wednesday happens to be mopping day in the lab, during third shift. Once the maintenance staff was alerted to the sensitivity of the equipment, no additional trips have occurred during this period. The remaining safing events are not well explained, but the timing (almost all during normal working hours) is strongly suggestive of workers in the area.

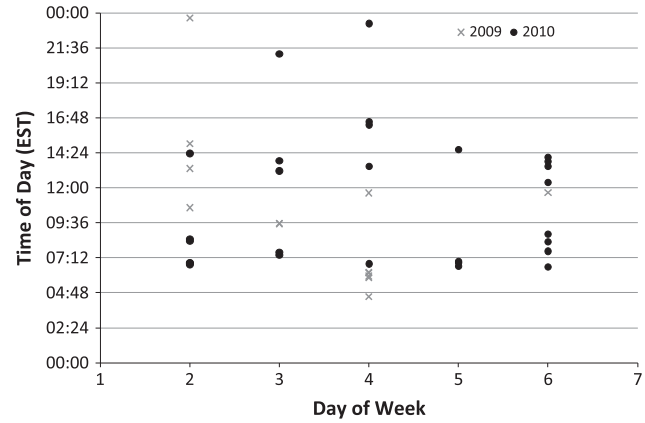

Fig. 5. System trips as a function of day of week and time of day (1 = Sunday, 7 = Saturday).

Since the lab is next to our paint room, it was suggested that the paint shaker was causing trips. An experiment was run under worst case conditions, but no anomalous vibrations were detected at the cooler. Pounding the floor with a hammer also did not create detectable shock loads at the cooler, but modest impacts to the chamber could create enough vibration to cause a trip.

Isolators were installed at the feet of the chamber in the summer of 2010 with no noticeable reduction in trip events. Additional isolation was installed and between the chamber and the cryocooler support plate in November 2010. Since the installation of internal isolators there has been considerable activity in the area, including partial removal of the wall between the life test lab and the paint room. Despite this, there have been no vibration overload trips since December 10, 2010. This suggests that the isolators are reducing the magnitude of shock load transmitted to the cooler.

3.3.2. Power increase in 2011

Periodic power increases have been observed throughout the life test. Each of these power rises have been for short periods of time, usually spanning from several hours to several days. After these rises, operating power levels return to their previous levels. In January 2011, a different pattern was observed, indicated by

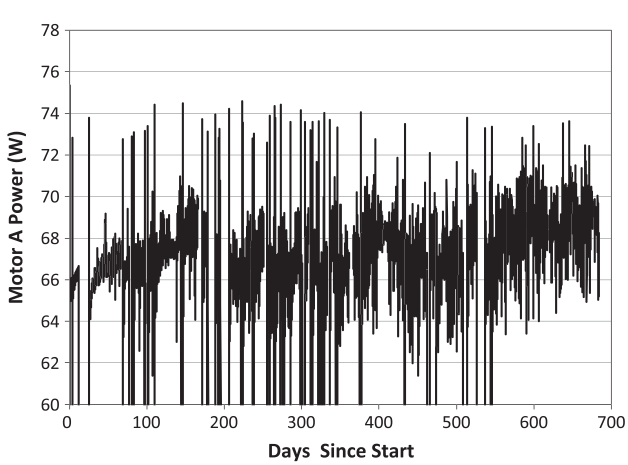

Fig. 4. Motor a power, first 700 days of testing.

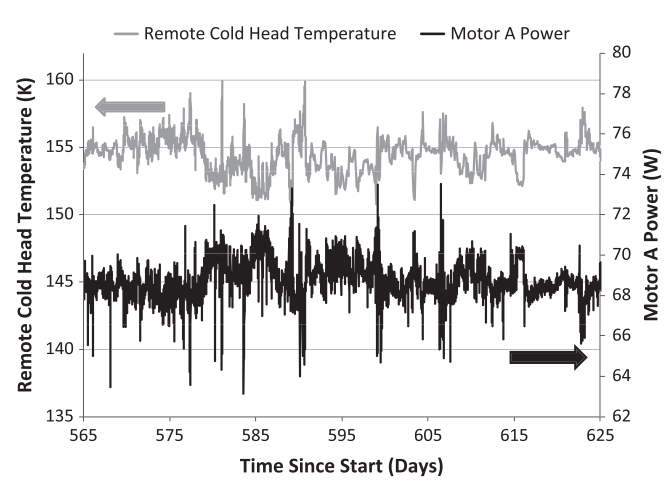

Fig. 6. Motor a power fluctuations early 2011.

an extended increase in the operating motor power of about 5 W above the level seen in the previous 17 months, see Fig. 6. The power increase seen on Day 578 was sustained for about 2 weeks before a rapid decrease in power occurred. This pattern has repeated several times in the subsequent months.

It is unlikely that this variation is a result of ice or any other contaminant. Ice would cause the power to increase, but without a warm up of the cold heads there's no plausible mechanism that would cause the power level could go down. As of the date of this writing, the power level is back to the previously observed value, so it is not a permanent change in the cooler performance.

It is possible that this is an effect of cross coupling between the remote cold head and the compressor. A colder remote cooler draws a greater fraction of the total compressor power. When the remote cools down, the compressor power increases to keep the integral at the same temperature. This causes the remote to cool further. It is hypothesized that the system reaches a quasi-stable equilibrium at a higher compressor power and lower remote temperature. A random fluctuation in the system would eventually lead to a warm up of the remote, resulting in a different equilibrium point. This would not occur in a typical flight application, where the temperature of structures cooled by the remote would be stabilized with a control heater.

4. Conclusion

As of April 27, 2011 the ABI cryocooler life test has completed 1.61 years of operation, out of a goal of 10 years. Total up time over the preceding 9 months has been 94.5%. The cooler is performing well, with no measurable degradation in performance. Test anomalies have been observed, particular vibration overload events, but these appear to be due to conditions of the test environment rather than an indication of a problem with the cooler.

Acknowledgements

This work was funded by NASA Contract NNG04HZ07C to ITT Corporation.

References

[1] Colbert R, Pruitt G, Nguyen T, Raab J, Clark S, Ramsey P. ABI cooler system protoflight performance. In: Miller SD, Ross RG, editors. Cryocoolers 15. Boulder, CO: ICC Press; 2008. p. 49–54.
[2] Ramsey P, Clark S, Chuchra A, Boyle R, Early D, Colbert R. Performance characterization of the ABI cryocooler. In: Miller SD, Ross RG, editors. Cryocoolers 15. Boulder, CO: ICC Press; 2008. p. 55–61.