GOES-R Series

Data Book

Prepared for
National Aeronautics and Space Administration
GOES-R Series Program Office
Goddard Space Flight Center
Greenbelt, Maryland 20771

Pursuant to
Contract NNG09HR00C

Rev -
September 2018
CDRL PM-14

This page left blank

CONTENTS

Foreword ____ *v*

Preface ____ *vii*

Acknowledgements ____ *ix*

1. Mission Overview ____ *1-1*

2. GOES Spacecraft Configuration ____ *2-1*

3. Advanced Baseline Imager ____ *3-1*

4. Geostationary Lightning Mapper ____ *4-1*

5. Space Environment In-Situ Suite ____ *5-1*

6. Magnetometer ____ *6-1*

7. The Extreme Ultraviolet and X-ray Irradiance Sensors Instrument ____ *7-1*

8. Solar Ultraviolet Imager ____ *8-1*

9. GOES-R Communications Subsystem ____ *9-1*

10. Command and Data Handling Subsystem ____ *10-1*

11. Electrical Power Subsystem ____ *11-9*

12. Guidance Navigation & Control ____ *12-1*

13. Propulsion Subsystem ____ *13-1*

14. Thermal Control Subsystem ____ *14-1*

15. Mechanisms ____ *15-1*

16. Ground System Architecture ____ *16-1*

17. Spacecraft Mission Phases ____ *17-1*

18. On-Orbit Mission Operations ____ *18-1*

19. Technical Performance Summary ____ *19-1*

20. Acronyms ____ *20-1*

This page left blank

Foreword

The Geostationary Operational Environmental Satellite – R Series (GOES-R) is the next generation of U.S geostationary weather satellites and is a key element in National Oceanic and Atmospheric Administration (NOAA) operations. GOES weather imagery and advanced weather products have been a continuous and reliable stream of environmental information used to support weather forecasting, severe storm tracking, and meteorological research. Evolutionary improvements in the geostationary satellite system since 1974 (i.e., since the first Synchronous Meteorological Satellite, SMS-1) have been responsible for making the GOES system a mainstay of weather forecasts and environmental monitoring.

The GOES-R series (GOES R, S, T, and U) represents the first major technological advancement in geostationary observations since 1994 and will extend the availability of the GOES system through 2036. The GOES-R series will provide critical atmospheric, hydrologic, oceanic, climatic, solar and space data, significantly improving the detection and observation of environmental phenomena that directly affect public safety, protection of property, and our nation's economic health and prosperity.

Designed to operate in geosynchronous orbit, 35,786 km (22,236 statute miles) above the equator, thereby remaining stationary relative to the Earth's surface, the advanced GOES-R series spacecraft will continuously view the contiguous United States, neighboring environs of the Pacific and Atlantic Oceans, and Central and South America. The GOES-R series spacecraft bus is three-axis stabilized and designed for 10 years of on-orbit operation preceded by up to five years of on-orbit storage. Two GOES satellites remain operational at all times while an on-orbit spare is maintained to permit rapid recovery from a failure of either of the operational satellites.

The Advanced Baseline Imager (ABI) is the primary instrument on the GOES-R series spacecraft for imaging Earth's weather, oceans and environment. ABI views the Earth with 16 different spectral bands (compared to five on the previous GOES series), including two visible channels, four near-infrared channels, and ten infrared channels. ABI's data will enable meteorologists to pinpoint and track developing storms in much greater detail.

The Geostationary Lightning Mapper (GLM) is the first operational lightning mapper flown in geostationary orbit. GLM detects and maps total lightning (in-cloud and cloud-to-ground) activity continuously over the Americas and adjacent ocean regions. Used in combination with radar, data from the ABI instrument, and surface observations, GLM data has great potential to increase lead time for severe thunderstorm and tornado warnings.

GOES-R series spacecraft also carry a suite of instruments to significantly improve detection of approaching space weather hazards. The satellites provide advanced imaging of the sun and detection of solar eruptions for earlier warning of disruption to power utilities and communication and navigation systems. The satellites also more accurately monitor energetic particles and the magnetic field variations that are associated with space weather for better assessment of radiation hazards and mitigation of damage to orbiting satellites, communications, and power grids.

Ground support is critical to the GOES-R series mission. To support the large increase in spatial, spectral, and temporal resolution of the ABI and other instruments, the raw data rate increased to 75Mbps, over 30 times the previous rate. NOAA has developed a state-of-the-art ground system to receive data from the GOES-R series spacecraft and generate real-time data products. The ground system operates from two primary locations: the National Satellite Operations Facility (NSOF) in Suitland, Maryland, and the Wallops Command and Data Acquisition Center (WCDAS) at Wallops, Virginia. A third operations facility in Fairmont, West Virginia, serves as the Consolidated Backup (CBU) in case of a systems or communications failure at either or both NSOF and WCDAS.

Those desiring further information about the GOES system should contact the NOAA National Environmental Satellite, Data and Information Service (NESDIS) and/or search the following internet addresses:

https://www.goes-r.gov/

http://www.noaa.gov/

https://www.nesdis.noaa.gov/

https://www.weather.gov/

https://www.ncei.noaa.gov/

https://www.swpc.noaa.gov/

Preface

To further enhance the utility of the GOES system, this reference presents a summary and technical overview of the GOES-R series system, its satellites, subsystems, sensor suite, and associated ground communication and data handling subsystems. The reference is intended to serve as a convenient and comprehensive technical reference for people working on or associated with the GOES-R series mission as well as general information suitable for public distribution. Sufficient technical information and performance data are presented to enable the reader to understand the importance of the GOES-R series mission, the system's capabilities, and how it meets the needs of the users.

Certain performance data presented herein, e.g., instrument performance, were predicted using pre-launch analyses and ground testing. As the satellites undergo on-orbit operations and actual data are obtained, such technical information in this reference may not necessarily reflect current capabilities. Furthermore, this reference is not meant to be a technical specification with absolute worst case performance numbers but rather a general document which informs the reader of nominal and typical GOES system performance and operational capabilities.

The GOES-R series program is a collaborative development and acquisition effort between NOAA and the National Aeronautics and Space Administration (NASA). Program activities occur at the co-located program and project offices at Goddard Space Flight Center in Greenbelt, Maryland. The GOES-R series program collaborates with industry partners across the United States to fulfill the GOES-R series mission. Lockheed Martin is the principal space system contractor, with associate contractors providing individual instruments to Lockheed for integration, and Harris is the prime ground system contractor. Each system has numerous supporting subcontractor.

This page left blank

Acknowledgements

This Data Book had major contributions from the following authors at Lockheed Martin (LM): Alexis Benz (lead), Jim Chapel, Anthony Dimercurio Jr., Bonnie Birckenstaedt, Clemens Tillier, William Nilsson III, Jesus Colon, Robert Dence, David Hansen Jr, and Pamela Campbell. Our special thanks for their efforts.

We would also like to thank the many instrument authors and NASA/NOAA personnel that provided inputs and reviews of the data book content, including Dennis Chesters, Ruth Cholvibul, Jonathan Chow, Gustave Comeyne, Lauren Gaches, Craig Keeler, Michael Kimberling, William Lebair, Marc Rafal, Chris Rollins, and Michelle Smith. We would also like to thank Michael Ames for the front and back cover artwork. Lastly, we would like to acknowledge Ashton Armstrong for her leadership in integrating the first draft of this book, and Diana Schuler for taking over as book manager, providing the final review and edits, and seeing the data book to completion and publishing.

This page left blank

1. Mission Overview

Mission Goals

The goals for the Geostationary Operational Environmental Satellite (GOES) system are to:

- Maintain continuous and reliable operational, environmental, and storm warning systems to protect life and property.
- Monitor the Earth's surface and space environmental conditions.
- Introduce improved atmospheric and oceanic observations and data dissemination capabilities.

To address these goals, the National Weather Service (NWS), NESDIS, and NOAA established mission requirements for the 21st century that are the basis for the design of the GOES-R series system and its capabilities. The GOES-R series system functions to accomplish an environmental mission serving the needs of operational meteorological, space environmental and research users. Figure 1-1 illustrates the GOES-R series satellite and its instruments.

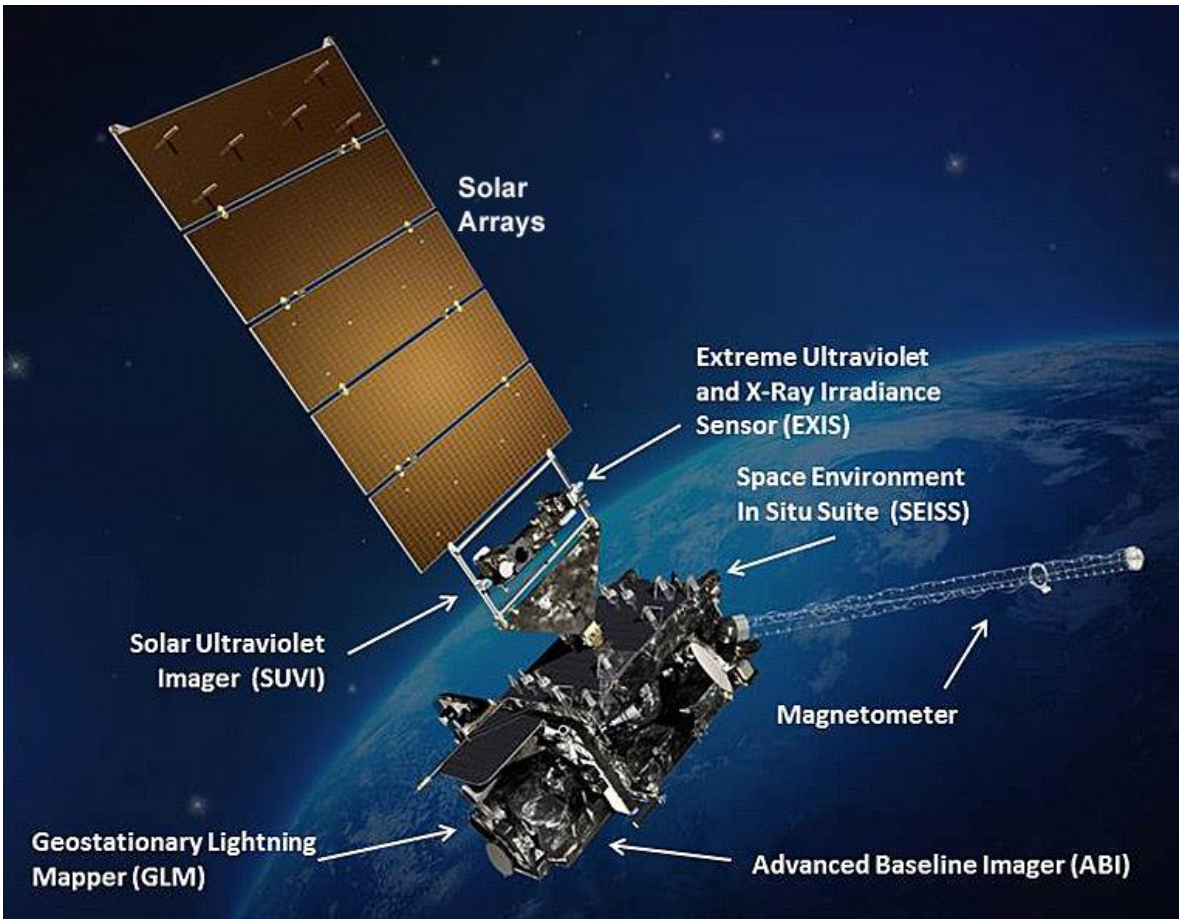

Figure 1-1. GOES-R Series Satellite

GOES System

To accomplish the GOES mission, the GOES-R series of spacecraft performs three major functions:

- **Environmental sensing**: acquisition, processing and dissemination of imaging data, space environment monitoring data, and measurement of near-Earth space weather.

- **Data collection**: interrogation and reception of data from Earth surface-based data collection platforms (DCPs) and relay of such data to the NESDIS command and data acquisition stations.

- **Data broadcast**: GOES Rebroadcast service (GRB) and Product Distribution and Access (PDA) of environmental sensor data. The relay of distress signals from aircraft or marine vessels to the Search and Rescue Satellite-Aided Tracking system (SARSAT). The continuous relay of weather facsimile to the Emergency Managers Weather Information Network (EMWIN) and other meteorological data to other users and the relay of emergency weather information to civil emergency managers.

The three major mission functions are supported or performed by the following components of the GOES-R series payloads:

Environmental sensing:

- Advanced Baseline Imager (ABI)
- Geostationary Lightning Mapper (GLM)
- Extreme Ultraviolet and X-ray Irradiance Sensors (EXIS)
- Magnetometer (MAG)
- Space Environment In-Situ Suite (SEISS)
- Solar Ultraviolet Imager (SUVI)

Data collection:

- Data collection system (DCS)
- Search and Rescue (SAR)

Data broadcast:

- Advanced Weather Interactive Processing System (AWIPS)
- Comprehensive Large Array-Data Stewardship System (CLASS)
- Emergency Managers Weather Information Network (EMWIN)
- GOES Rebroadcast (GRB)
- High Rate Information Transmission (HRIT)
- Product Distribution and Access (PDA)
- Search and Rescue Satellite Aided Tracking (SARSAT) System

A general overview of the GOES-R series system (including space and ground elements) is shown in Figure 1-2.

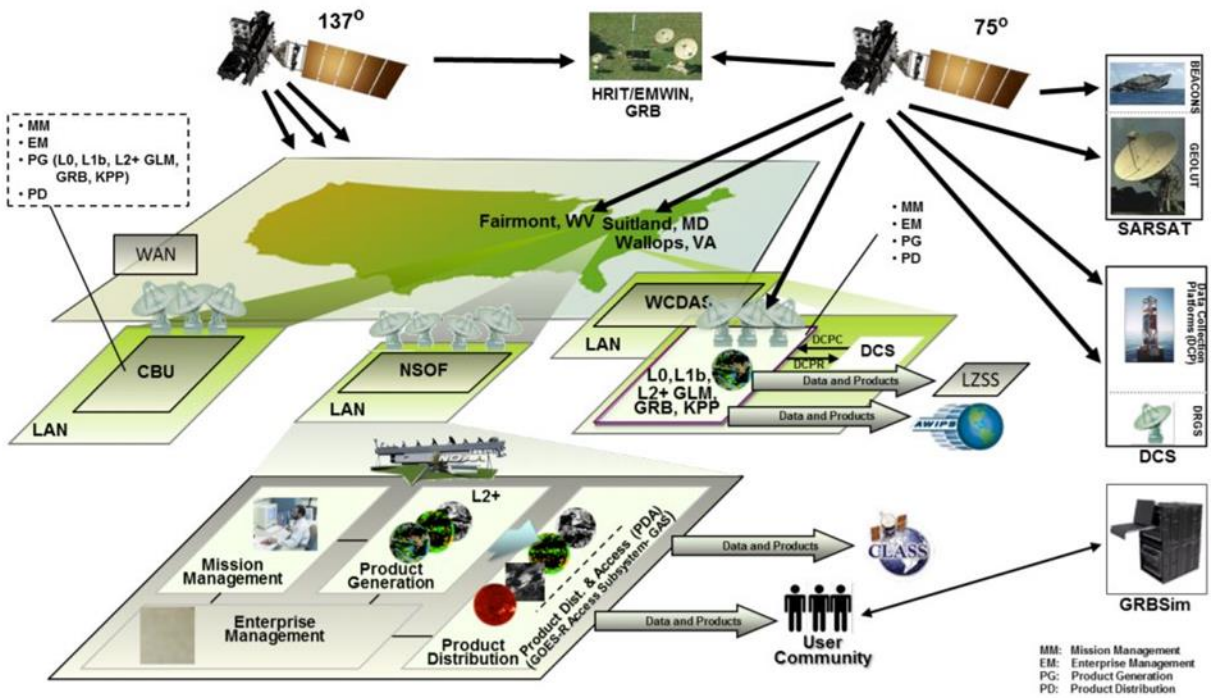

Figure 1-2. GOES-R Series System and Ground System Overview

Space System

The GOES-R series of spacecraft are the prime observational platforms for covering dynamic weather events and the near-Earth space environment for the 21st century. These advanced spacecraft enhance the capability of the GOES system to continuously observe and measure meteorological phenomena in real time, providing the meteorological community and atmospheric scientists of the western hemisphere with greatly improved observational and measurement data. The key advancements realized by the GOES-R series are related to the instrument payloads and spacecraft. The advanced instruments drive improvements in the overall system, such as the processing, generation and distribution of data products. Advances in the spacecraft improve the overall operations of the satellites and improvements in the instruments provide greater temporal resolution. These enhanced operational services improve support for short-term weather forecasting and space environment monitoring as well as atmospheric sciences research and development for numerical weather prediction models, and environmental sensor design.

Observational Platform

The GOES-R series spacecraft bus is three-axis stabilized and designed for 10 years of on-orbit operation preceded by up to five years of on-orbit storage. Two GOES satellites remain operational at all times while an on-orbit spare is maintained to permit rapid recovery from a failure of either of the operational satellites. The GOES-R series spacecraft design enables the sensors to stare at the Earth and thus more frequently image clouds and lightning, and monitor the Earth's surface temperature and water vapor fields. Thus, the evolution of atmospheric phenomena can be followed, ensuring real-time coverage of short-lived, dynamic events, especially severe local storms and tropical cyclones. These are meteorological events that directly affect public safety, protection of property, and, ultimately, economic health and development. Various design features of the GOES-R series spacecraft enable high volume, high quality data to be generated for the weather community. There are two important capabilities. The first is flexible scan control—a capability that allows small area coverage for improved short-term weather forecasts over local areas—and simultaneous, independent imaging. The second is precision on-orbit station keeping, coupled with three-axis stabilization, which ensures a steady observational platform for the mission sensors.

The GOES-R series will permit a vast reduction over legacy GOES missions in instrument data collection outages due to satellite maintenance activities. Satellite "operate-through" performance for routine housekeeping such as momentum management and east/west station keeping maneuvers precludes the need to schedule daily or monthly outage periods. Coupled with the enhanced ABI capabilities of imaging through eclipse, the GOES-R series outage goal is less than 3 hours per year compared to the hundreds of hours per year of the GOES-I/M series. Other notable performance enhancements include: vibration isolation for the Earth-pointed optical bench, high-speed spacecraft-to-instrument interfaces designed to maximize science data collection, and an improved attitude control and image navigation capability.

Geographic Coverage

The GOES spacecraft, on-station 35,786 km (22,236 statute miles) above the equator and stationary relative to the Earth's surface, can view the contiguous 48 states, Alaska, the central and eastern Pacific Ocean, central and western Atlantic Ocean areas, and the South American continent. Pacific coverage includes the Hawaiian Islands and the Gulf of Alaska. Because the Atlantic and Pacific basins strongly influence the weather affecting the United States, coverage is provided by two GOES spacecraft.

The combined footprint (radiometric coverage and communications range) of the two spacecraft encompasses Earth's full disk about the meridian approximately in the center of the contiguous United States. Circles of observational limits centered at a spacecraft's suborbital point extend to beyond 60° north/south latitudes. The radiometric footprints are determined by the limit from the suborbital point, beyond which interpretation of cloud data becomes unreliable. At least one GOES spacecraft is always within line-of-sight view of Earth-based terminals and stations. The command and data acquisition station at WCDAS has a line-of-sight to both spacecraft to uplink commands and receive downlinked data from each simultaneously, with CBU facility ready in the event of a systems or communications failure at WCDAS. The GOES-R series maintains the two-satellite system implemented by the previous GOES satellites. However, the locations of the operational GOES-R series satellites will be 75^0 W and 137^0 W. The latter is a shift from previous

GOES at 135^0 W in order to eliminate conflicts with other satellite systems. The GOES-R series operational lifetime extends through December 2036. Figure 1-3 illustrates the geographic coverage of the GOES-R series constellation.

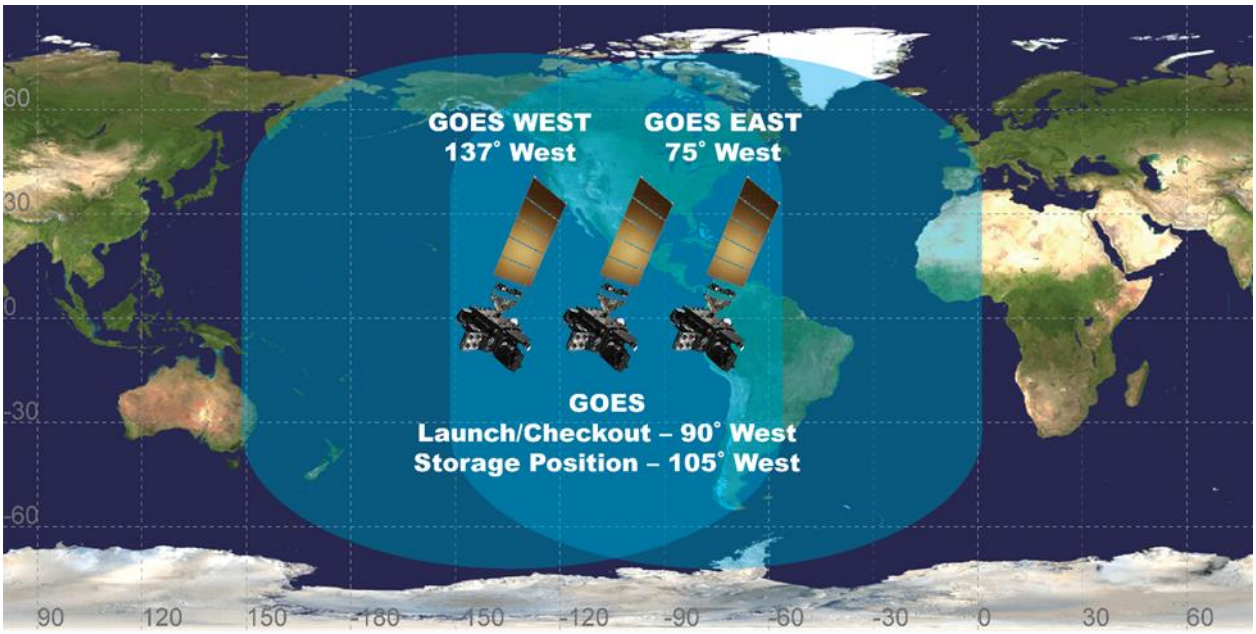

Figure 1-3. Geographic Coverage of the GOES-R Series Constellation

Advanced Baseline Imager (ABI)

The Advanced Baseline Imager, manufactured by the Harris Corporation, is the primary instrument on the GOES-R series for imaging Earth's weather, oceans and environment. It is a multi-channel passive imaging radiometer designed to observe the Western Hemisphere and provide variable area imagery and radiometric information of Earth's surface, atmosphere and cloud cover. ABI views the Earth with 16 different spectral bands (compared to five on the previous GOES series), including two visible channels, four near-infrared channels, and ten infrared channels. These different channels (wavelengths) are used by models and tools to indicate various elements on the earth's surface or in the atmosphere, such as trees, water, clouds, moisture or smoke. ABI provides four times the resolution and five times faster temporal coverage than the prior generation of GOES.

ABI has three scan modes. The default mode (known as Scan Mode 3, or Flex Mode) concurrently takes a full disk (Western Hemisphere) image every 15 minutes, an image of the Contiguous U.S. (CONUS) every five minutes, two smaller, more detailed mesoscale images of areas where storm activity is present, every 60 seconds or one mesoscale image every 30 seconds. Similarly, a second flexible mode (Scan Mode 6) has been added that is the same as Scan mode 3 in all regards except that the full disk image is taken every 10 minutes. The ABI can also operate in continuous full disk mode (known as Scan Mode 4), providing uninterrupted scans of the full disk every 5 minutes. All ABI bands have on-orbit calibration. Figure 1-4A and Figure 1-4B illustrate

the ABI spatial resolution and coverage area and default meso locations for the GOES-East and GOES-West locations, respectively.

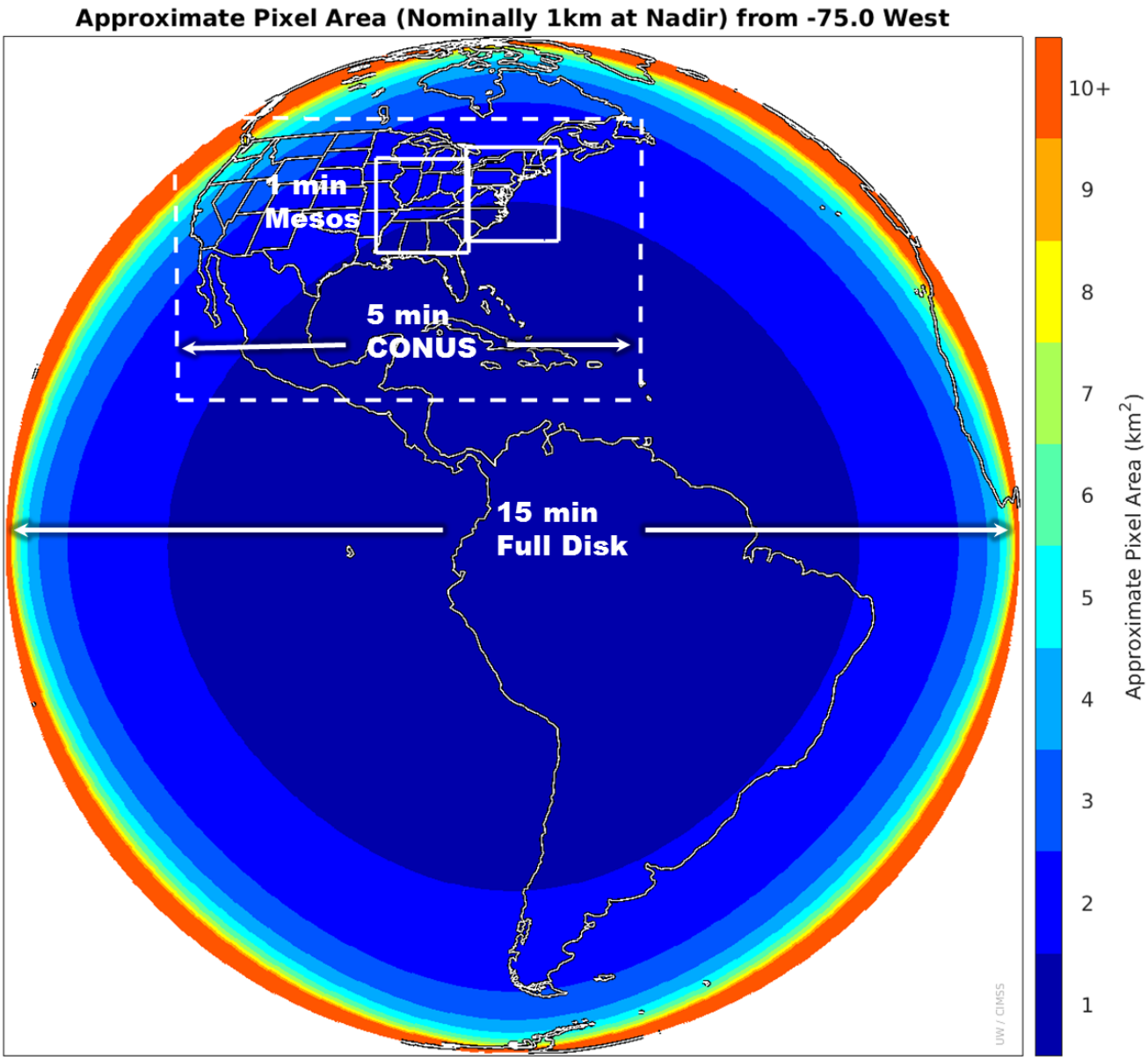

Figure 1-4A. ABI Spatial Resolution, Coverage Area, and Collection Times with GOES-East Operational View and default Meso locations

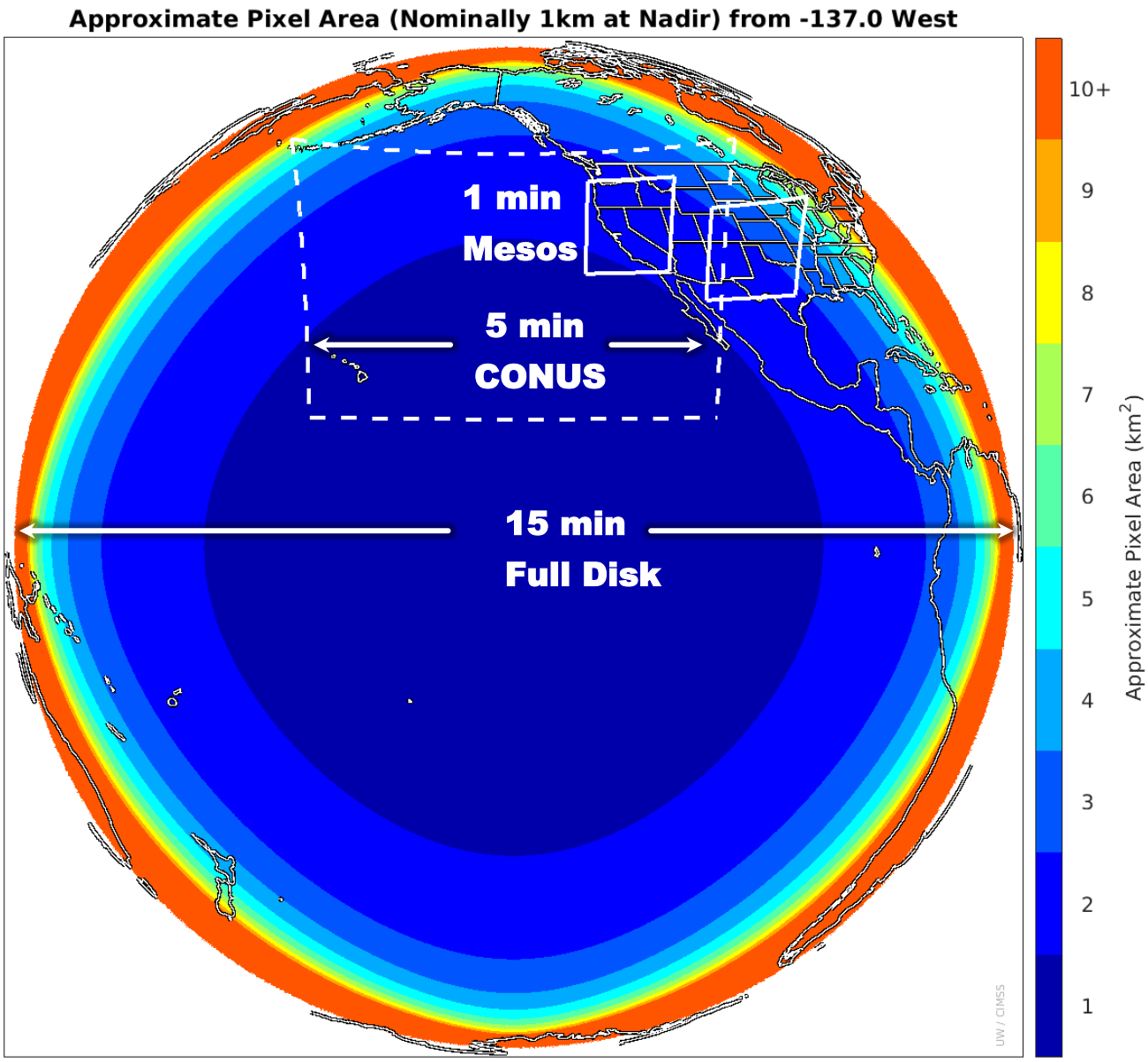

Figure 1-4B. ABI Spatial Resolution, Coverage Area, and Collection Times with GOES-West Operational View and default Meso locations

The ABI is used for a wide range of applications related to weather, oceans, land, climate and hazards (fires, volcanoes, floods, hurricanes and storms that spawn tornadoes). It can track and monitor cloud formation, atmospheric motion, convection, land surface temperature, ocean dynamics, flow of water, fire, smoke, volcanic ash plumes, aerosols and air quality, and vegetative health. ABI's data enables meteorologists to pinpoint and track developing storms in much greater detail. Future products will also help the aviation industry with aircraft icing threat detection and turbulent flight condition predictions.

Benefits from the ABI include improved tropical cyclone forecasts, fewer weather-related flight delays and airline incidences with volcanic plumes, increased efficiency in irrigated water usage

in agriculture, and higher protection rates for recreational boats in the event of a tropical storm or hurricane.

Geostationary Lightning Mapper (GLM)

The Geostationary Lightning Mapper, manufactured by Lockheed Martin, is the first operational lightning mapper flown in geostationary orbit. GLM measures total lightning, both in-cloud and cloud-to-ground, to aid in forecasting intensifying storms and severe weather events. GLM is unique both in how it operates and in the information it collects. The instrument is sensitive to the in-cloud lightning that is most dominant in severe thunderstorms and provides nearly-uniform total lightning coverage over the region of interest.

GLM is a single-channel, near-infrared optical transient detector that can detect the momentary changes in an optical scene, indicating the presence of lightning. GLM detects and maps total lightning activity throughout the day and night over the Americas and adjacent ocean regions with near-uniform spatial resolution of approximately 10 kilometers. The instrument collects information such as the location, brightness and extent of lightning discharges to identify intensifying storms, which are often accompanied by increased total lightning activity.

Trends in total lightning that will be available with GLM have the promise of providing critical information to forecasters which will allow them to focus on developing severe storms much earlier than they can currently, and before these storms produce damaging winds, hail or even tornadoes. Such storms often exhibit a significant increase in total lightning activity, particularly in-cloud lightning, often many minutes before radar detects the potential for severe weather. Used in combination with radar, data from ABI, and surface observations, GLM data has great potential to increase lead time for severe thunderstorm and tornado warnings. Data from the instrument will also be used to produce a long-term database to track decadal changes in lightning activity. This is important due to lightning's role in maintaining the electrical balance between Earth and its atmosphere and potential changes in extreme weather and severe storms under a changing climate.

Space Weather Instruments

The GOES-R series of satellites host a suite of instruments that provide significantly improved detection of approaching space weather hazards. Changes in "space weather" can affect the operational reliability of communication and navigation systems, disrupt power lines, damage satellite electrical systems, and may cause radiation damage to orbiting satellites, high-altitude aircraft and the International Space Station, as well as harming astronauts.

Two sun-pointing instruments measure solar ultraviolet light and X-rays. The Solar Ultraviolet Imager (SUVI) observes and characterizes complex active regions of the sun, and provides six-channel movies of solar flares and the eruptions of solar filaments which may give rise to coronal mass ejections. The Extreme Ultraviolet and X-ray Irradiance Sensor (EXIS) detects solar flares and monitors solar irradiance that impacts the upper atmosphere.

The satellites also carry two instruments that measure the space environment. The Space Environment In-Situ Suite (SEISS) monitors proton, electron and heavy ion fluxes in the magnetosphere. The Magnetometer (MAG) measures the magnetic field in the outer portion of the magnetosphere.

The GOES-R SUVI and EXIS instruments provide improved imaging of the sun and detection of solar eruptions, while SEISS and MAG more accurately monitor, respectively, energetic particles and the magnetic field variations that are associated with space weather. Together, observations from these instruments will enable NOAA's Space Weather Prediction Center to significantly improve space weather forecasts and provide early warning of possible impacts to Earth's space environment and potentially disruptive events on the ground.

Other Data Services

Emergency radio beacons are carried on ships and planes to signal distress to satellites orbiting overhead. The GOES-R series continues the legacy Geostationary Search and Rescue (GEOSAR) function of the SARSAT system onboard NOAA's GOES satellites which has contributed to the rescue of thousands of individuals in distress. The SARSAT transponder was modified slightly for the GOES-R series by operating with a lower uplink power (32 dBm), enabling the satellites to detect weaker signal beacons. The SARSAT transponder onboard GOES-R series satellites provides the capability to immediately detect distress signals from emergency beacons and relay them to ground stations, called Local User Terminals. In turn, this signal is routed to a SARSAT Mission Control Center and then sent to a Rescue Coordination Center which dispatches a search and rescue team to the location of the distress.

Ground System

The GOES-R series ground system has a much greater product distribution capability over the legacy missions. To support the large increase in spatial, spectral, and temporal resolution of the ABI and other instruments, the raw data rate has increased to 75Mbps, over 30 times the previous rate. GOES-R series data volume drives a large increase in processing requirements for product generation and for distribution of the products to users.

The ground system receives the Level 0 (L0) raw data from GOES-R series spacecraft and generates Level 1b (L1b) and Level 2+ (L2+) products and makes these products available to users in a timely manner. Level 0 data is the unprocessed instrument data at full resolution. L1b data is the L0 data processed with radiometric and geometric correction applied to produce parameters in physical units. L2+ data are derived environmental variables generated from L1b data along with other ancillary source data, such as from the National Weather Prediction forecast model output data. Table 1-1 shows a listing of the L1b and L2+ GOES-R series science products by instrument.

The GOES-R ground system (GS), developed by Harris Corporation, consists of several functional components. Mission Management (MM) provides the satellite operations (monitor and control) function of the GS (via the Harris OS/COMET® software). Enterprise Management (EM) is distributed over all GS components and locations and provides for the ability to monitor the complete enterprise, as well as control the operations not directly associated with satellite operations. Product Generation (PG) provides the L1b and L2+ product generation function. Product Distribution (PD) functionality provides for direct distribution of product data to the GOES-R Access Subsystem (GAS), NWS Advanced Weather Interactive Processing System (AWIPS) and CLASS (an electronic library of NOAA environmental data). Long term archive and access

services to retrospective users of GOES-R series data will be provided by CLASS, which is considered an external interface to the GOES-R series GS, but is part of the NOAA infrastructure.

Table 1-1. GOES-R L1b and L2+ Science Products

Instrument	Level1b Products
ABI	– Radiances
SEISS	– Energetic Heavy Ions – Magnetospheric e-/p+: Low Energy – Magnetospheric e-/p+: High Energy – Solar & Galactic Protons
EXIS	– Solar Flux: EUV – Solar Flux: X-ray Irradiance
SUVI	– Solar EUV Imagery
MAG	– Geomagnetic Field

ABI Level 2+ Products
– Cloud and Moisture Imagery (CMI) and Sectorized CMI (KPP) – Aerosol Detection (Smoke & Dust) – Aerosol Optical Depth (AOD) – Clear Sky Mask – Cloud Optical Depth – Cloud Particle Size Distribution – Cloud Top Height – Cloud Top Phase – Cloud Top Pressure – Cloud Top Temperature – Derived Motion Winds – Derived Stability Indices – Downward S/W Radiation: Surface – Fire/Hot Spot Characterization – Hurricane Intensity Estimation – Land Surface Temperature – Legacy Vertical Moisture Profile – Legacy Vertical Temperature Profile – Rainfall Rate/QPE – Reflected S/W Radiation: TOA – Sea Surface Temperature – Snow Cover – Total Precipitable Water – Volcanic Ash: Detection and Height

GLM Level 2+ Products
– Lightning: Events, Groups, & Flashes

Network Architecture

The GS operates from two primary locations: NSOF in Suitland, Maryland, and WCDAS in Wallops, Virginia. A third operations facility in Fairmont, West Virginia, serves as the CBU in case of a systems or communications failure at either or both NSOF and WCDAS. The satellites are commanded throughout their mission lifetime from the NSOF with the ground station radio frequency (RF) interface located at WCDAS (or the CBU, as needed). The engineering telemetry

streams are received by both the WCDAS and CBU, then ground relayed to the NSOF for processing and monitoring at all locations.

In addition to the redundant operational environments at each ground location, the GS includes separate development and integration and test (I&T) environments for the purposes of ongoing development and I&T throughout the GOES-R mission. Two on-site Development Environments (DE) (one at NSOF and one at WCDAS) and three Integration and Test Environments (ITE) (one at NSOF and two at WCDAS) are provided by the GS for software maintenance. Local DE and ITE workstations are provided at WCDAS and NSOF. In addition, DE and ITE workstations are provided at NSOF to accommodate remote use of the WCDAS DE and ITE functions. The CBU does not provide a DE or ITE and relies on WCDAS for software maintenance.

Raw instrument data (L0) is received at WCDAS. It is then processed by the Product Generation (PG) function at WCDAS to create Level 1b (L1b) and some Level 2+ (L2+) products. These L1b and L2+ products are then rebroadcast through the GRB transponder. The GRB data are then received at NSOF where the rest of the L2+ products are created. Ancillary data used in generating the L2+ products are ingested from the Ancillary Data Relay System (ADRS). Applicable products are directly distributed to 1) NWS AWIPS where key NWS Weather Forecast Offices (WFO) and other AWIPS users get their data, and 2) GAS for use by the Environmental Satellite Processing Center (ESPC) and other GOES data users.

GOES-R series data products will be available using new product distribution and access technologies. An overview of the GOES-R series ground system architecture as well as more information about product distribution can be found in the Ground System Architecture section of this book.

GOES Rebroadcast (GRB)

GRB provides the primary relay of full resolution, calibrated, near-real-time direct broadcast L1b data from each instrument and L2 data from GLM. GRB replaces the GOES VARiable (GVAR) service, and is a significant increase in capability from that service. GRB contains the ABI, GLM, space environment, and solar data which drive data flow in the NOAA space and Earth environment research and operational framework.

GRB uses two digital streams, each at 15.5 Mbps, compared to the GVAR standard of a single 2.11 Mbps stream. A dual polarization approach is used to accommodate the 31 Mbps data rate within a frequency bandwidth of 9.8 or 10.9 MHz per polarization, using a standard downlink modulation at 1686.6 MHz (L-band). GRB is able to deliver a full disk image in either five, ten, or fifteen minutes, depending on mode, compared to GVAR's thirty minutes.

The GRB processed instrument data is packetized compliant with Consultative Committee for Space Data Systems (CCSDS) Standard 133.0-B-l and utilizes lossless data compression to fit within allocated bandwidth. Data blocking and accompanying header metadata are used to minimize the risk of data loss due to link errors and allow for user verification of data integrity.

This page left blank

2. GOES Spacecraft Configuration

The GOES-R series satellite is based on the Lockheed Martin A2100 bus. The satellite with the magnetometer, solar array, X-band antenna, and antenna wing fully deployed (on-orbit configuration) can be viewed in Figure 2-1. (Note that SEISS is not identified in this figure as it is not viewable in this isometric view.) The 6,280 pound, three-axis stabilized GOES-R spacecraft was designed for an on-orbit life of 15 years. The spacecraft bus provides mechanical support and alignment of the various instrument payloads, communications payloads and other bus components.

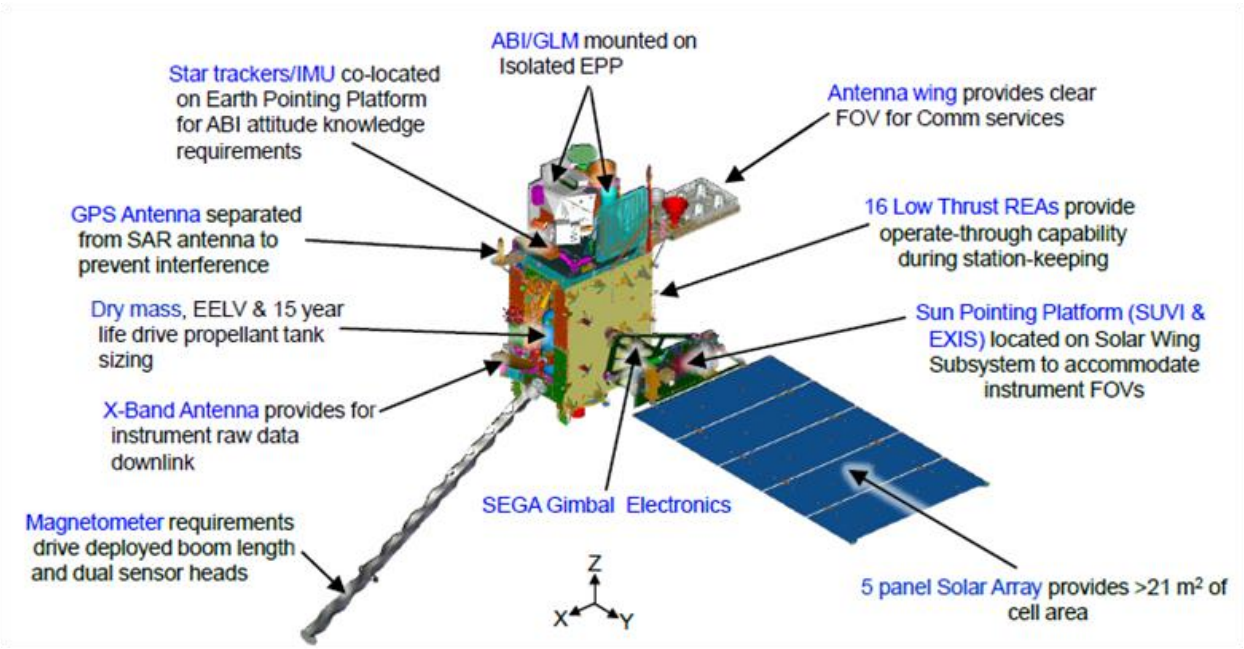

Figure 2-1: Fully Deployed GOES-R Satellite

The satellite houses three classifications of instruments: Nadir-pointing, Solar-pointing, and In-Situ (near environment). The Nadir pointing instruments include the ABI and the GLM. These instruments are mounted on a highly stable, precision earth-pointed platform, and are dynamically isolated from the rest of the spacecraft. The Solar-pointing instruments, which include the EXIS, SUVI, and the Unique Payload Services (UPS) are mounted on a Sun Pointing Platform (SPP) housed on a solar array yoke. The SPP provides a stable platform that tracks the seasonal and daily movement of the sun relative to the spacecraft. The In-Situ instruments include the SEISS and the Magnetometer. The Magnetometer is mounted on a boom that deploys once the spacecraft reaches orbit. The boom provides relative magnetic isolation for this instrument. Each of the GOES-R Series instruments are described in detail in subsequent chapters.

A spacecraft overview system block diagram, depicting each of the spacecraft subsystems, is shown in Figure 2-2. The following paragraphs briefly describe each subsystem. More details can be found in subsequent chapters.

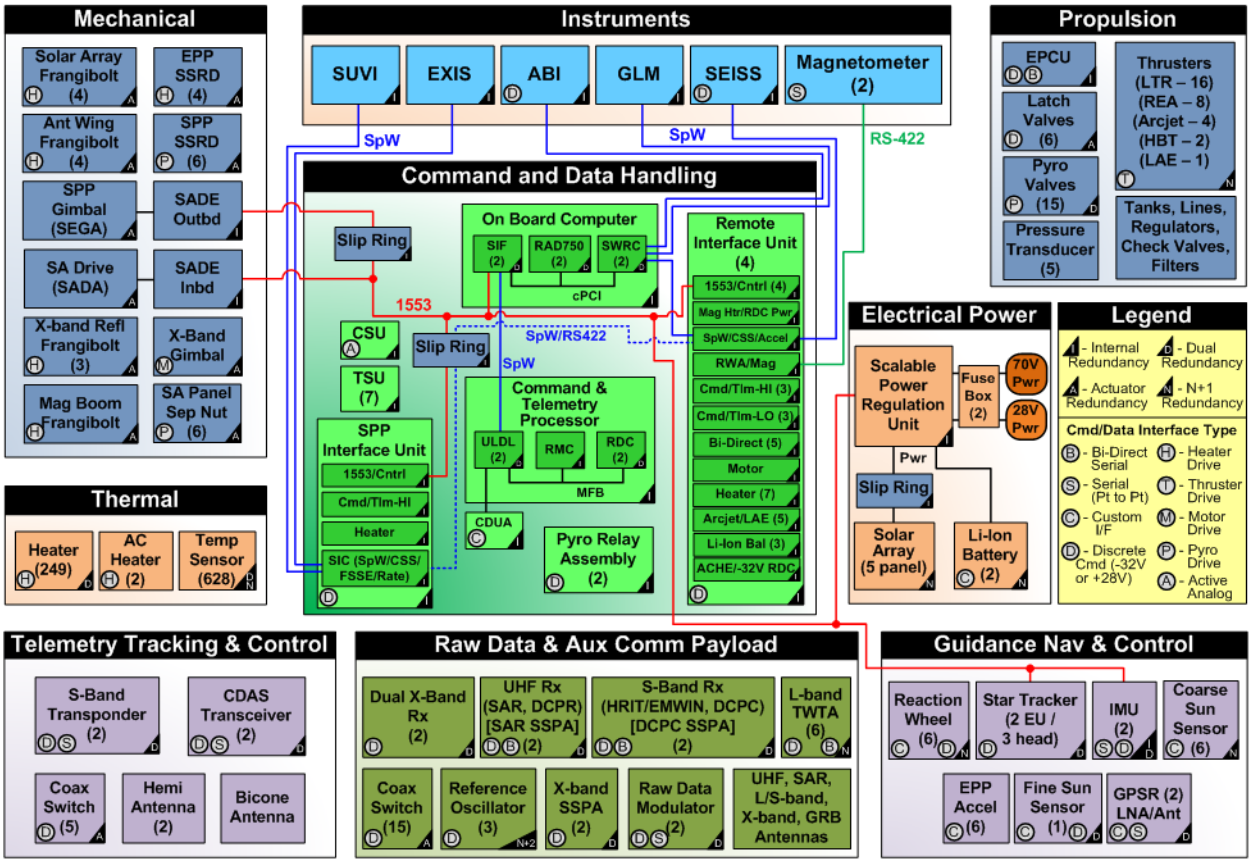

Figure 2-2: GOES-R Series Satellite System Block Diagram

Communications Subsystem

The communications subsystem provides the antennas and transponders used for communicating with the ground system and for data relay services. The spacecraft uses S-band, L-Band, X-Band and UHF links to provide the command, telemetry, and tracking functions. It also provides a set of communications services (Unique Payload Services) which: support the Data Collection Platforms; relay High Rate Information Transmission (HRIT) and imaging data between Earth terminals and relays the Emergency Managers Weather Information Network (EMWIN) broadcast on the HRIT/EMWIN; detects and communicates Search and Rescue (SAR) Emergency Locator Transmitter distress signals; and rebroadcasts processed GOES-R sensor data via the GOES Re-broadcast (GRB).

Command and Data Handling Subsystem

The command and data handling (C&DH) system includes the hardware needed to process, route, and deliver commands, telemetry, and instrument data on board the spacecraft, including the processing resources needed for the flight software to function. The C&DH system includes

6 component types, including the on-board computers, command and telemetry processors, remote interface units, sun pointing platform interface electronics, pyro relay assemblies, and a command decryption unit assembly.

Electrical Power Subsystem

The primary function of the electrical power subsystem (EPS) is to provide power to operate the satellite for 15 years in geostationary orbit. It consists of a Scalable Power Regulation Unit (SPRU) to control the flow of power from the solar arrays and batteries onto the busses, two batteries for energy storage, a solar array for power generation, 70 volt and 28 volt power busses to distribute power to the loads, and two Fuse Board Assemblies to provide load overcurrent protection.

Guidance, Navigation and Control Subsystem

The guidance, navigation and control (GN&C) subsystem provides guidance, navigation, and attitude & articulation control for the GOES-R spacecraft. Inertial Measurement Units (IMU) and star trackers provide attitude determination, a global positioning system (GPS) receiver provides orbit determination, and attitude control is provided using reaction wheels and the propulsion system. The GN&C subsystem is also responsible for controlling the spacecraft's gimbals for the X-Band antenna, solar panel, and sun-pointing platform.

Propulsion Subsystem

The propulsion subsystem provides the impulse to perform the thrusting maneuvers required during each mission phase, from launch and orbit raising through end of life maneuvers. It consists of a single liquid apogee engine (LAE), sixteen monopropellant low thrust rocket engine assemblies (REA), eight monopropellant REAs, two hydrazine bi-propellant thrusters, 4 Arcjets, and associated tanks, valves, and regulators.

Thermal Control Subsystem

The thermal control subsystem consists of all spacecraft thermal elements and coatings required to control the onboard temperature of spacecraft elements. The subsystem uses active and passive thermal control techniques, and includes finishes, insulators, multi-layer insulation (MLI), heaters, thermostats and other heater controls, temperature sensors, heat transferring apparatus, radiators, sun shields and radiation shields to accomplish its function.

Mechanical Subsystem

The Mechanical subsystem provides the mechanical interface and structural support for spacecraft components as well as the mechanisms that must be stowed and restrained for launch and later deployment. The structure possesses sufficient strength, stiffness, and damping for subsystems and payloads to survive the load conditions that exist within the envelope of the mission as well as test requirements. The mechanisms include hinges, retention and release (R&R) hardware, motors, gimbals and dampers. These are used to deploy and point the Solar Wing Subsystem and the antennas.

Launch and Ascent Configuration

During launch and ascent, the Sun Pointing Subsystem (SPS), as well as the Solar Array Wing Assembly (SAWA), is folded against the +Y side of the spacecraft bus (as seen in a Body Reference Frame (BRF)) and each are held in place with restraint and release (R&R) mechanisms. The stowed configuration is shown in Figure 2-3.The SPS utilizes six R&Rs to support the Sun Pointing Platform (SPP) and two R&Rs to support the yoke/frame assembly. The

SAWA is also supported with six R&Rs. When in the stowed configuration, instruments on the SPP face outboard and solar cells on the outboard SAWA panel face outward.

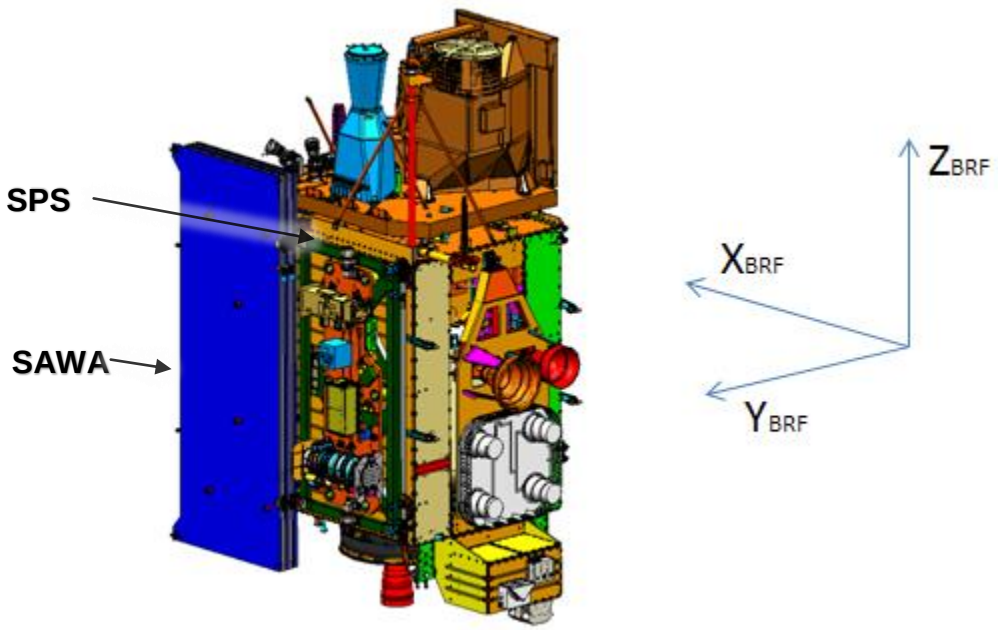

Figure 2-3. Launch and Ascent Configuration in Body Reference Frame

Orbit Raising Configuration

During transfer orbit operations, the solar array is in the first stage deployed configuration. In the first stage deployed configuration, the inboard SAWA panel (panel 1) and the SPS remain stowed against the +Y side of the satellite. The solar array panels 2 through 5 are fully deployed and in the same plane as panel 1. All panel solar cells face outward (+Y direction). The inboard panel utilizes two R&Rs to attach to the spacecraft bus in this configuration. The solar cells on the SAWA panels face the direction shown in Figure 2-4.

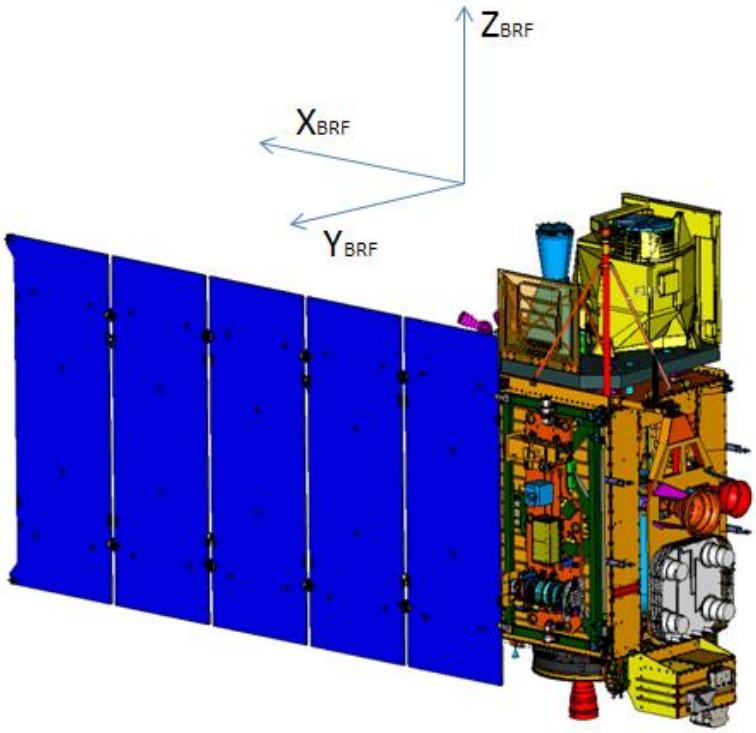

Figure 2-4. Transfer Orbit Configuration (1st Stage Deployment)

On-Orbit Configuration

After Geosynchronous Earth Orbit (GEO) is achieved, the SPS is commanded to fully deploy, as shown in Figure 2-5. The SPS articulates and maintains the SPP and the solar array in a sun pointing orientation. Occasionally the SPP may be slewed 16 degrees off pointing from the sun to allow for calibration of the science instrument on the SPP.

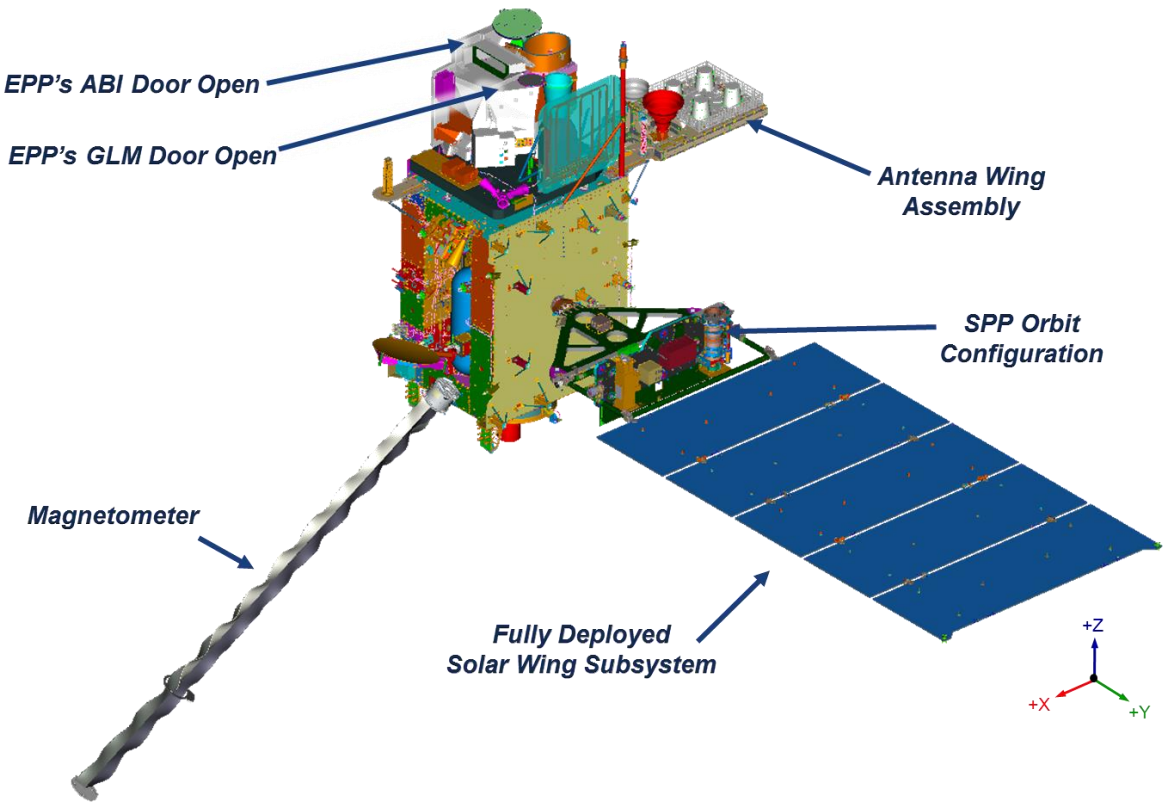

Figure 2-5. On-Orbit Solar Array Configuration (2nd/Final Stage Deployment)

3. Advanced Baseline Imager

The Advanced Baseline Imager, manufactured by Harris Corporation, is a multi-spectral imaging radiometer for the GOES-R series of satellites. It provides nearly continuous imagery of the Western Hemisphere from geostationary orbit for weather prediction and other Earth science applications. ABI measures Earth's radiance in 16 spectral channels ranging from visible (0.47µm) to longwave infrared (13.3 µm). A view of the ABI is shown in Figure 3-1.

Figure 3-1. ABI

ABI scans the Earth via two orthogonal scan mirrors: one east-west (EW) and one north-south (NS). The EW mirror scans the Earth at 1.4° (optical) per second; a single EW scan is called a swath. The NS mirror is then stepped to a new location to begin another EW swath. In this manner, ABI can scan the full Earth image in five minutes (known as Mode 4 – Continuous Full Disk mode) or alternatively scan the full Earth in 15 minutes with interleaved 5-minute images of the Contiguous United States (CONUS) and two 60-second (or one 30-second) 1000 x 1000 km mesoscale images. This mode is known as Mode 3, or Flex mode. Mesoscale images are helpful for viewing storm activity. A third scan mode (known and Mode 6) has been added that is the same as Mode 3 except that the full Earth scan is performed in 10 minutes instead of 15 minutes.

The scanning motion of the two scan mirrors direct Earth's radiance into a four-mirror, off-axis telescope that converges the energy into the aft optics. There the energy is separated into three bands, visible and near infrared (VNIR), midwave infrared (MWIR), and longwave infrared (LWIR), and ultimately sensed by a unique set of detectors for each of the 16 spectral bands. The nadir spatial resolution of the collected imagery ranges from 0.5 to 1 km in the visible channels and 1 to 2km in the infrared channels. A summary of the characteristics for each

spectral channel is shown in Table 3-1. A further description of the key performance requirements is shown in Table 3-2.

Representative Instrument radiometric noise and dynamic range are shown in Table 3-3, along with typical applications for each ABI bands. The nominal center wavelength is shown. The exact wavelength center can vary slightly by flight model (FM). Each ABI FM was designed to collect radiometric data both for the earth, and for the needed reference sources to calibrate the earth scenes. For ABI, this includes cold space (~4 K) and a hot blackbody source flying on-board ABI. Although ABI observes cold space to help remove its own warm telescope background, earth scenes are warmer. The brightness temperature of the internal blackbody emitter used for calibration is warmer than that of typical earth scenes, and can be configured. Achieved radiometric noise performance varies by detector and FM, but is often better than these levels. The maximum range capability for each FM to observe radiance (expressed in brightness temperature units) often exceeds the physical brightness temperature ranges for the earth. In the case of fires though, the need to report brightness temperature of the fire was balanced against the need to monitor cold clouds. Typical applications of these radiance measurements are shown in Table 3-3 as well.

The Radiances product produced by the Ground Segment (GS) from the ABI observations has units of W/(m^2 sr um) in bands less than 3 um and mW/(m^2 sr cm^{-1}) in bands greater than 3 um. The Ground Segment produces the Cloud and Moisture Imagery product that converts the radiance output for bands greater than 3 um to Brightness temperatures in units of Kelvin, so maximum ranges are often listed in K. The product range, configurable in the GS, was required to cover earth scenes of interest and start at about 180 K. The products, ranges, and associated bit depths are detailed in a separate document called the GOES-R Product Users Guide (PUG), which can be found at https://www.goes-r.gov.

Table 3-1. ABI Channel Characteristics

	Channel / Band	Center Wavelength (µm)	EW IFOV (µrad)	NS IFOV (µrad)	EW ASD (µrad)	Pixel Size*(km)
VNIR	1	0.47	22.9	22.9	22	1
	2	0.64	12.4	10.5	11	0.5
	3	0.865	22.9	22.9	22	1
	4	1.378	51.5	42.0	44	2
	5	1.61	22.9	22.9	22	1
	6	2.25	51.5	42.0	44	2
MWIR	7	3.90	51.5	47.7	44	2
	8	6.185	51.5	47.7	44	2
	9	6.95	51.5	47.7	44	2
	10	7.34	51.5	47.7	44	2
	11	8.5	51.5	47.7	44	2
LWIR	12	9.61	51.5	47.7	44	2
	13	10.35	34.3	38.1	44	2
	14	11.2	34.3	38.1	44	2
	15	12.3	34.3	38.1	44	2
	16	13.3	34.3	38.1	44	2

***Pixel size refers to post-resampled image pixel spacing at nadir**

Table 3-2. ABI Channel Performance Requirements Summary

Parameter	Performance	
Calibration Accuracy	VNIR	±3% (±4% for 1.378 μm) for 100% albedo scene
	MWIR and LWIR	±1 K for 300 K scene
Relative Accuracy	Pixel-to-Pixel	<NEdT
	Swath-to-Swath	<NEdT
	Channel-to-Channel	<0.2 K
	Image-to-Image	<0.2 K
	Calibration	<0.2 K
Navigation		21 μrad
Registration		
Frame-to-Frame	0.5 and 1.0 km	17.6 μrad
	2.0 km	23.0 μrad
Within-Frame		21.0 μrad
Swath-to-Swath		7.8 μrad
Channel-to-Channel	2km-to-2km/1km/0.5km	11.2 μrad
	1km-to-1km/0.5km	6.0 μrad

Table 3-3. ABI Radiometric Precision and Dynamic Range Requirements

	Channel / Band	Center Wavelength (µm)	SNR / NEdT*	Dynamic Range	Typical Applications
VNIR	1	0.47	300:1	0 – 100% Albedo	Daytime aerosol over land, coastal water mapping
	2	0.64	300:1	0 – 100% Albedo	Daytime clouds, fog, solar flux, and winds
	3	0.865	300:1	0 – 100% Albedo	Daytime vegetation/burn scar and aerosol over water, winds
	4	1.378	300:1	0 – 100% Albedo	Daytime cirrus clouds
	5	1.61	300:1	0 – 100% Albedo	Daytime cloud-top phase and particle size, snow
	6	2.25	300:1	0 – 100% Albedo	Daytime land/cloud properties, particle size, vegetation, snow
MWIR	7	3.90	0.1 K	4 – 400 K	Surface and cloud, fog at night, fire, winds
	8	6.185	0.1 K	4 – 300 K	High-level atmospheric water vapor, winds, rainfall
	9	6.95	0.1 K	4 – 300 K	Mid-level atmospheric water vapor, winds, and rainfall
	10	7.34	0.1 K	4 – 320 K	Lower-level water vapor and winds
	11	8.5	0.1 K	4 – 330 K	Total water for stability, cloud phase, dust, and rainfall
LWIR	12	9.61	0.1 K	4 – 300 K	Total ozone, turbulence, and winds
	13	10.35	0.1 K	4 – 330 K	Surface and cloud properties
	14	11.2	0.1 K	4 – 330 K	Sea surface temperatures, rainfall and cloud properties
	15	12.3	0.1 K	4 – 330 K	Total water, ash, sea surface temp., and cloud properties
	16	13.3	0.3 K	4 – 305 K	Atm. temps and cloud heights

***SNR @ 100% albedo; NEdT at 300 K**

ABI is comprised of three units as shown in Figure 3-2. The Sensor Unit (SU) is mounted on the spacecraft Earth Pointing Platform (EPP) and collects the scene radiance and converts it to digital counts. The Cryocooler Control Electronics (CCE) controls the active coolers used to maintain the infrared detectors at cryogenic temperatures. The two CCE units are mounted on the -Y module panel. The Electronics Unit (EU) provides command and control of the SU and CCE. It is also mounted on the -Y module panel.

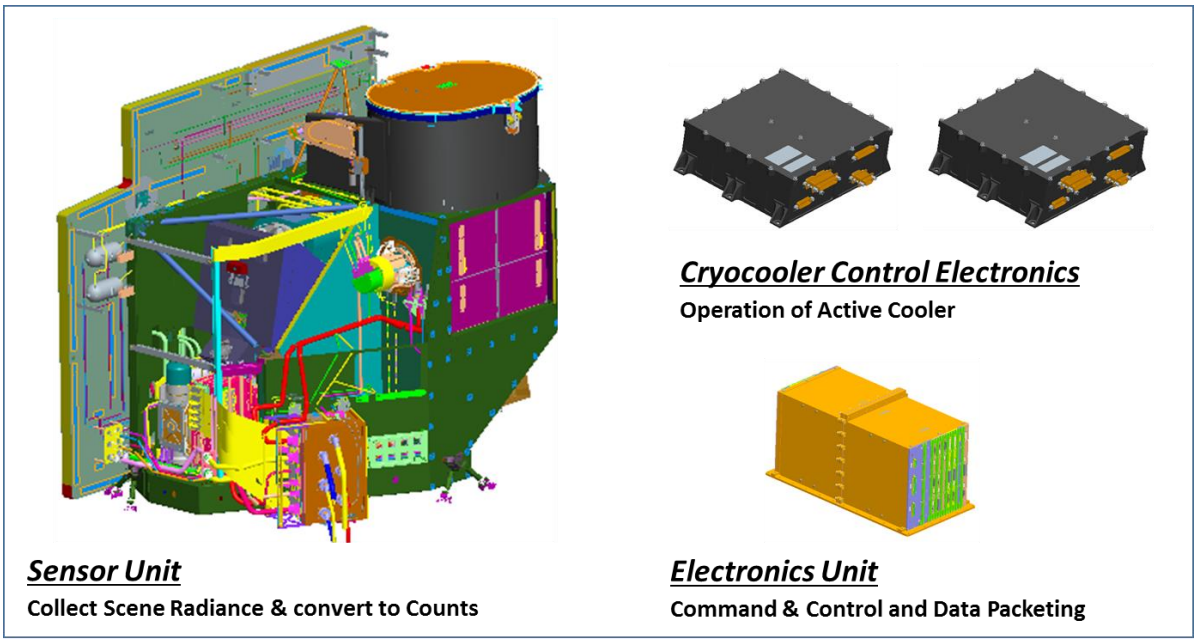

Figure 3-2. ABI Units

Sensor Unit

The Sensor Unit (SU) consists of a number of subsystems, as shown in Figure 3-3. The Optical Bench is the backbone of ABI as it provides the structural support for all of the other subsystems, establishes the mechanical alignment to the spacecraft, and controls the thermal and mechanical loads to and from the spacecraft. The Optical Bench provides support for the Optical Port Sunshield, the EW and NS Scanners, Telescope, Aft Optics, Solar Calibration Assembly (SCA), Internal Calibration Target, Active Cooler, Scanner Shrouds, the Thermal Control Radiator and Heat Pipes, and the Sensor Unit Electronics (SUE). The function of each subsystem is summarized in Table 3-4. This section will address most of the subassemblies in the SU. Discussion of the SUE can be found in the electronics section, and the two calibration assemblies are described in a later section on calibration during operations.

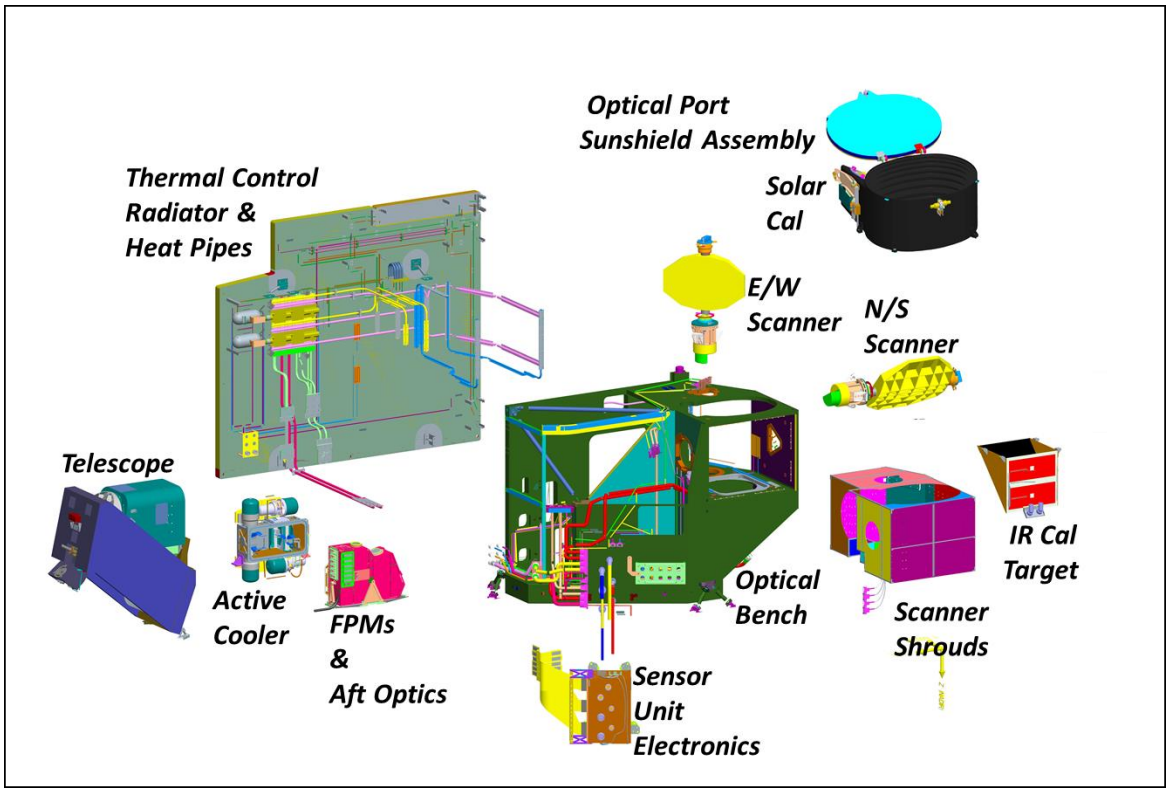

Figure 3-3. ABI Sensor Unit Subsystems

Table 3-4. Sensor Unit (SU) Subsystems

Subsystem	**Function**
Optical Bench	Provides structural support for subsystems
Optical Port Sunshield Assembly	Reduces stray light via series of baffles, prevents contamination during storage, provides mechanical mount for solar calibration target
EW and NS scanner	Provides line-of-sight pointing capability
Telescope	Creates an image of the select scene on the focal plane array detectors
Focal Plane Modules (FPMs) and Aft Optics	Provides spectral separation and a controlled thermal environment for the focal plane detectors, which convert photons to electrons
Solar Calibration Assembly	Provides radiometric calibration target for visible and near-infrared channel detectors
Internal Calibration Target	Provides radiometric calibration target for infrared channels
Active Cooler (Cryocoolers)	Provides cooling capability and thermal control of detectors
Thermal Control Radiator and Heat Pipes	Provides Sensor Unit thermal control
Scanner shrouds	Addresses sun's heat within scan cavity
Sensor Unit Electronics	Provides video processor to read out detector arrays as well as thermal control electronics and control of other mechanisms

Optical Port Sunshield Assembly

The Optical Port Sunshield Assembly (OPSA) primarily reduces the stray light entering the system. The OPSA has a one-time deployable Optical Port Cover (OPC) that is stowed prior to launch and secured using a non-explosive, shape memory alloy (SMA) pin-puller launch lock. The cover protects ABI against contamination prior to launch and solar intrusion throughout the launch and orbit-raising portions of the mission. Once the launch lock is released, spring-loaded hinges automatically open the OPC where it is captured on a mechanical stop using a Velcro strip.

Optical System

After deployment of the OPC on-orbit, the SU can begin its primary function of collecting scene radiance and converting it to digital counts for processing by the EU. The optical collection of radiance begins with the scan mirrors directing the line-of-sight at the desired scene. ABI has two Scan Mirror Assemblies that consist of a scan mirror, a Scan Drive Assembly (SDA), and Support Bearing Assembly. Each SDA mounts to the Optical Bench and supports one side of the scan mirror. It primarily controls the mirror via the motor and monitors the position of the mirror by way of an optical encoder. The SDA motor is controlled via the Scanner Interface & Motor Driver (SIMD) Circuit Card Assembly (CCA) in the EU. The Support Bearing Assembly also mounts to the Optical Bench and anchors the other side of the mirror.

As shown in Figure 3-4, the two scan mirrors are oriented orthogonally to one another to independently scan the LOS in the NS and EW directions. The optical LOS angle is twice the mechanical angle. The separation of EW and NS scanning allows for scans parallel to the equator without image rotation and inherently compensates for polarization. Both mirrors can operate simultaneously, permitting scans and slews over a wide range of angles that allows the LOS to be pointed anywhere within the field-of-regard as well as to the Blackbody Calibration Target, an internal calibration source for the ABI.

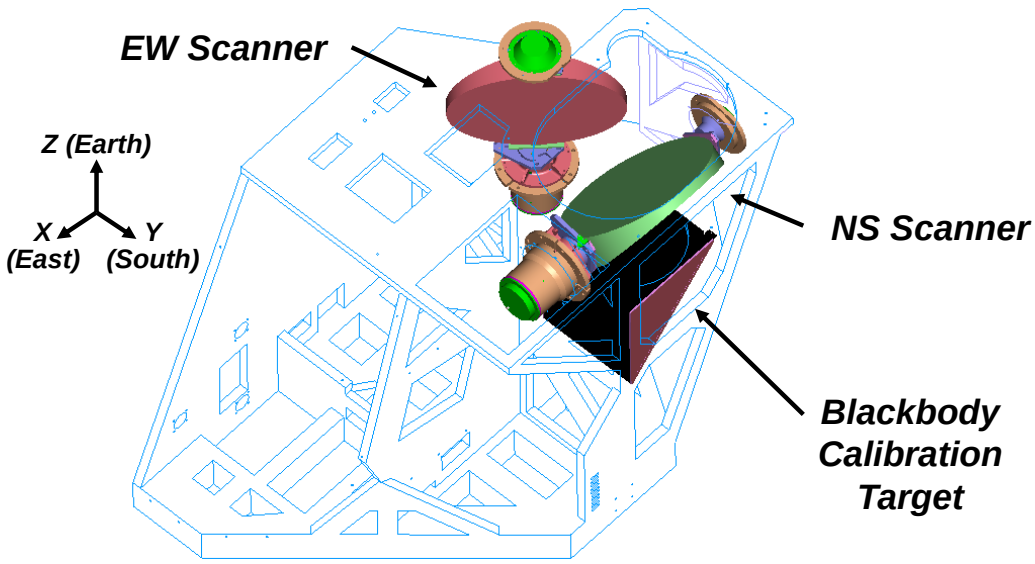

Figure 3-4. ABI Scanner

In addition to the scan mirrors, the ABI optical system consists of a telescope and the Aft Optics as shown in Figure 3-5. The scan mirrors direct the incoming radiance into the telescope. The ABI telescope is comprised of four mirrors and forms the image of the scene on each of the three Focal Plane Modules (FPMs). One of the four telescope mirrors can be driven by motor to make minor adjustments in focus. The Telescope Assembly consists of the telescope plus the Visible–Infrared (VIS/IR) beamsplitter and fold mirror. The VIS/IR beamsplitter (BS1) separates the incoming radiance into VNIR and infrared spectral components. Wavelengths greater than 3 µm are reflected toward the IR focal planes, and those less than 3 µm are transmitted to the fold mirror and then onto the VNIR FPM.

The Aft Optics provides additional spectral separation and holds all the optical components together to provide co-alignment of the FPMs. The separation of the infrared into MWIR and LWIR radiance occurs via the Midwave–Longwave (MW/LW) beamsplitter (BS2). Within each spectral band (VNIR, MWIR, LWIR), narrowband spectral selection for each channel is accomplished using filters integrated into the FPMs. The Aft Optics also includes windows and cold stops and provides a controlled cryogenic environment for the FPMs. The LWIR and MWIR optics and FPMs are maintained at approximately 60K. The VNIR optics and FPM are maintained at approximately 170 K (180 K for FPM on GOES-R). Cooling of the focal planes to these cryogenic temperatures is accomplished using the cryocooler.

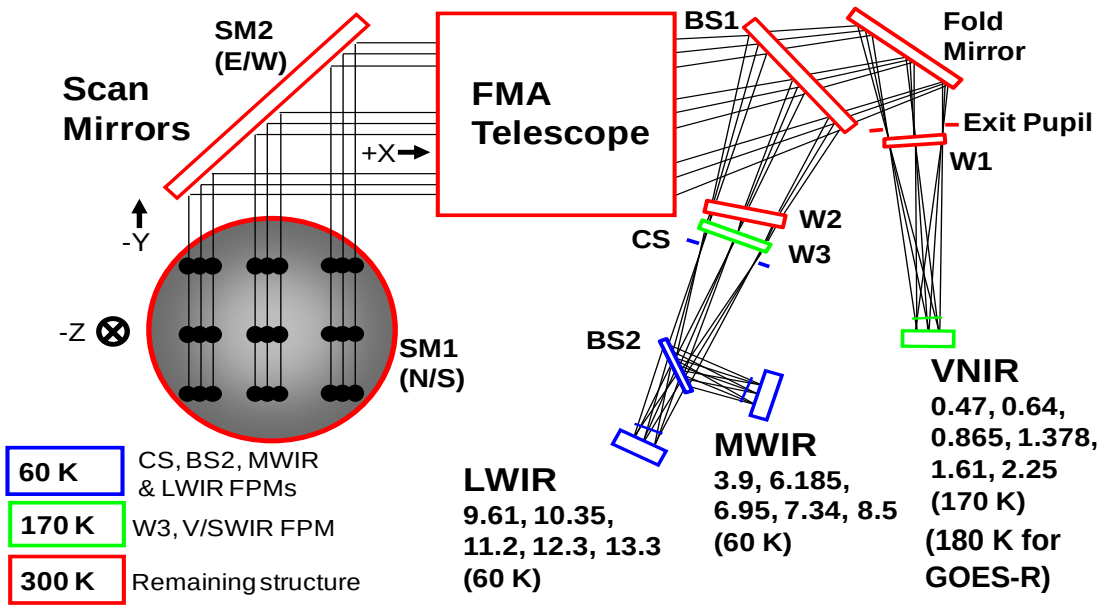

Figure 3-5. Optics Block Diagram

Focal Plane Modules

The FPMs filter the image produced by the telescope into select spectral channels, detect it, and convert it into analog signals for the video processor. There are three FPMs corresponding to the three spectral bands: VNIR, MWIR, and LWIR. Spectral selection is accomplished using bandpass filters positioned above the linear detector arrays. The VNIR FPM provides six spectral channels centered on wavelengths ranging from 0.47 µm to 2.25 µm. The MWIR FPM provides five spectral channels centered on wavelengths ranging from 3.9 µm to 8.5 µm. The LWIR FPM provides five spectral channels centered on wavelengths ranging from 9.61 µm to 13.3 µm. The layout of the VNIR, MWIR, and LWIR Focal Plane Arrays (FPAs) are shown in Figure 3-6, Figure 3-7, and Figure 3-8, respectively. The perspective is that of an observer viewing the side of the FPA illuminated by incident radiance.

ABI's FPAs are the combination of a detector array and its associated Read-Out Integrated Circuit (ROIC) for a single spectral channel. The FPA is the portion of the FPM that detects the incident radiance and converts it to an electrical signal. Table 3-5 lists several physical properties of each of the ABI FPAs. Each FPA provides two-fold redundancy. One redundancy consists of separate Side 1 and Side 2 electronics. The second redundancy is the availability of multiple columns of detectors within each electronics side. The number of redundant columns for each spectral channel is shown in the column labeled "Columns per Side" in Table 3-5. A single detector element from each row is downlinked during any data collection. This is accomplished using a configurable table of the selected detector elements for each channel called the Best Detector Select (BDS) map, as illustrated in Figure 3-9.

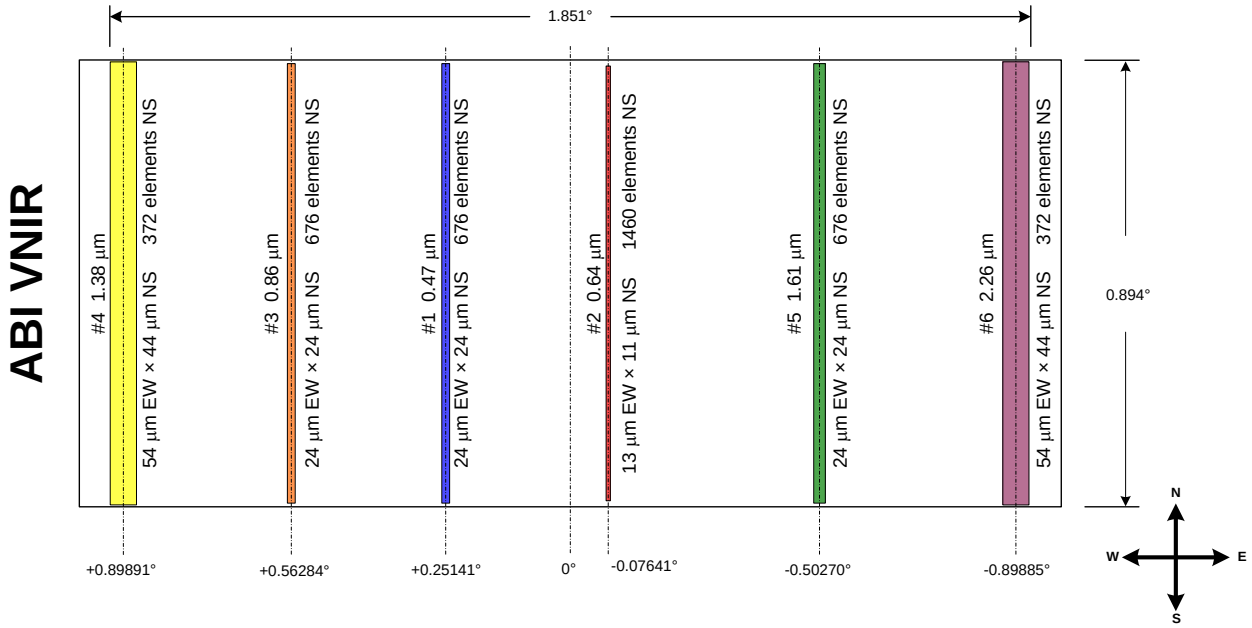

Figure 3-6. VNIR Focal Plane Module Layout

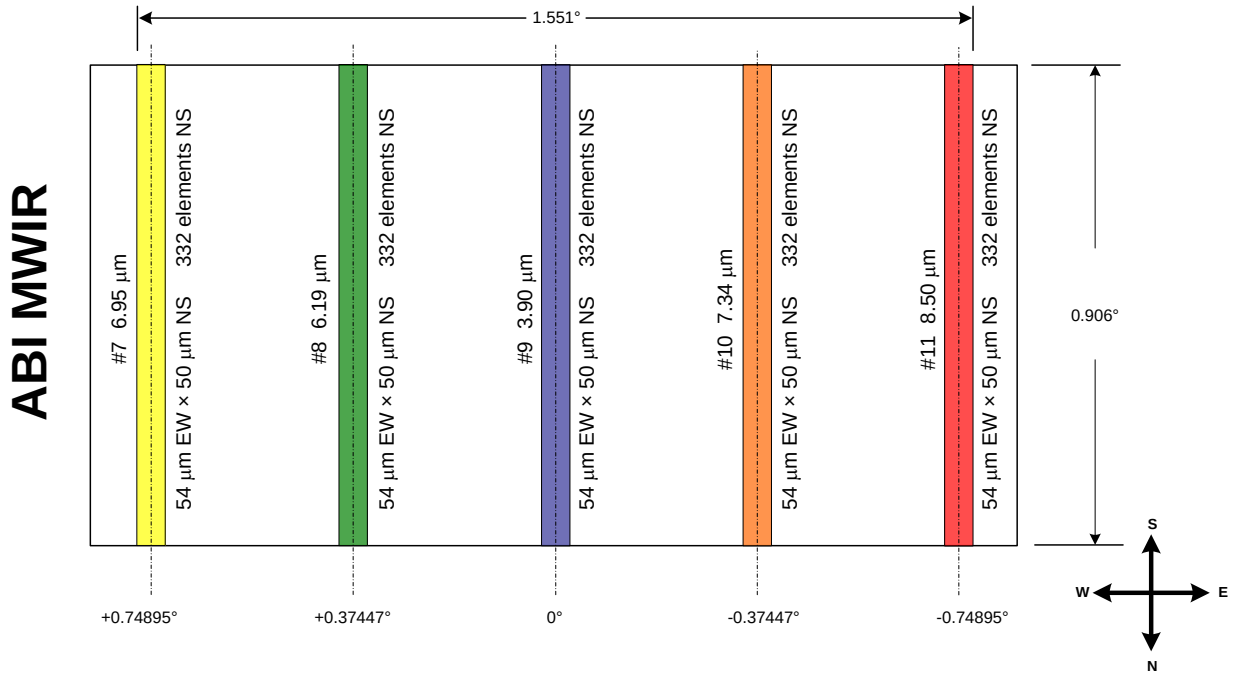

Figure 3-7. MWIR Focal Plane Module Layout

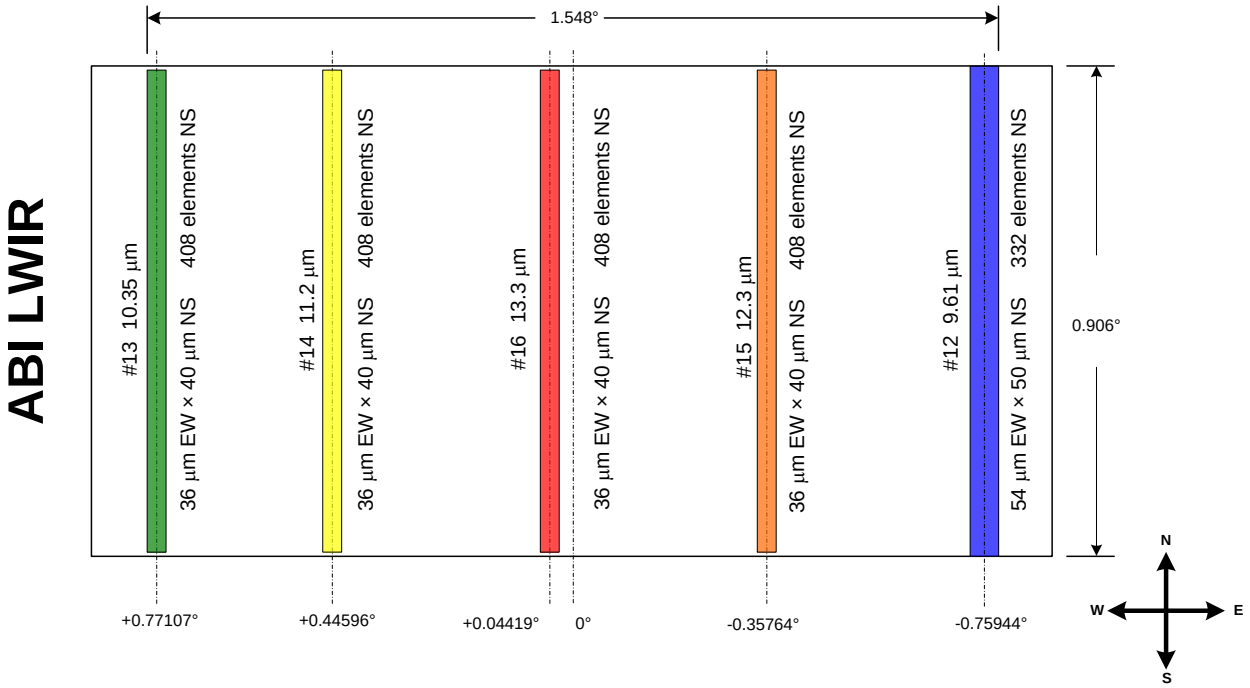

Figure 3-8. LWIR Focal Plane Module Layout

Table 3-5. Focal Plane Array Properties

FPM	Channel (µm)	Columns per Side	Number of NS Rows	Detector Type
VNIR	0.47	3	676	Silicon
	0.64	3	1460	Silicon
	0.86	3	676	Silicon
	1.378	6	372	HgCdTe
	1.61	6	676	HgCdTe
	2.25	6	372	HgCdTe
MWIR	3.90	6	332	HgCdTe
	6.185	6	332	HgCdTe
	6.95	6	332	HgCdTe
	7.34	6	332	HgCdTe
	8.50	6	332	HgCdTe
LWIR	9.61	6	332	HgCdTe
	10.35	6	408	HgCdTe
	11.2	6	408	HgCdTe
	12.3	6	408	HgCdTe
	13.3	6	408	HgCdTe

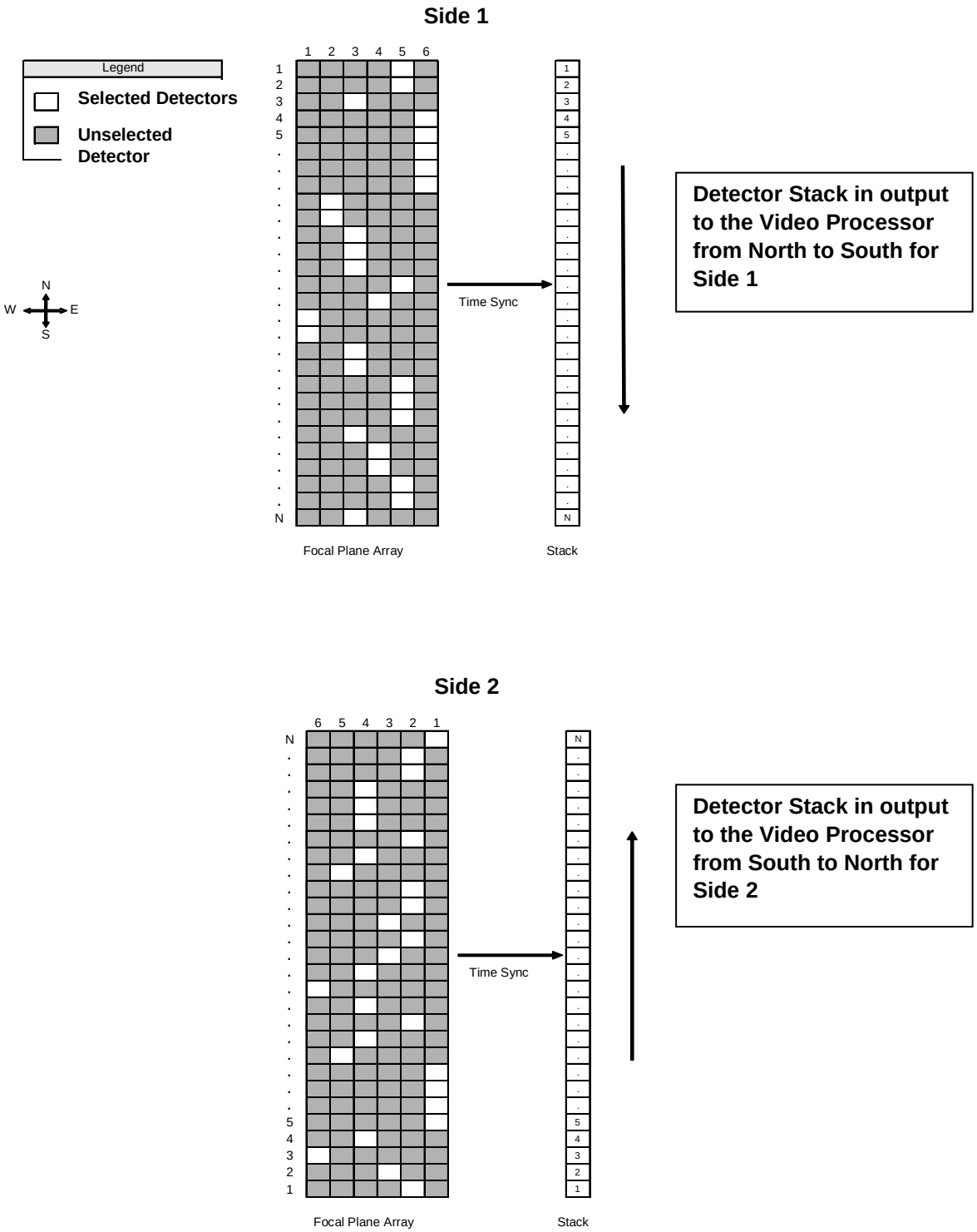

Figure 3-9. Best Detector Select Maps (Note: NS is reversed for MWIR FPAs)

Thermal Control

ABI utilizes several assemblies and subsystems to maintain thermal control: the radiator, loop heat pipes, scan shroud, cryocoolers, and heaters

Radiator/Loop Heat Pipe Assembly

The radiator and Loop Heat Pipe (LHP) assembly, as shown in Figure 3-10, work in concert to reject the excess Sensor Unit thermal energy to space. The radiator is a large reflective surface that radiates energy to space. The LHPs are the interface between the instrument and the radiator; they transfer excess energy from the rest of the SU to the radiator.

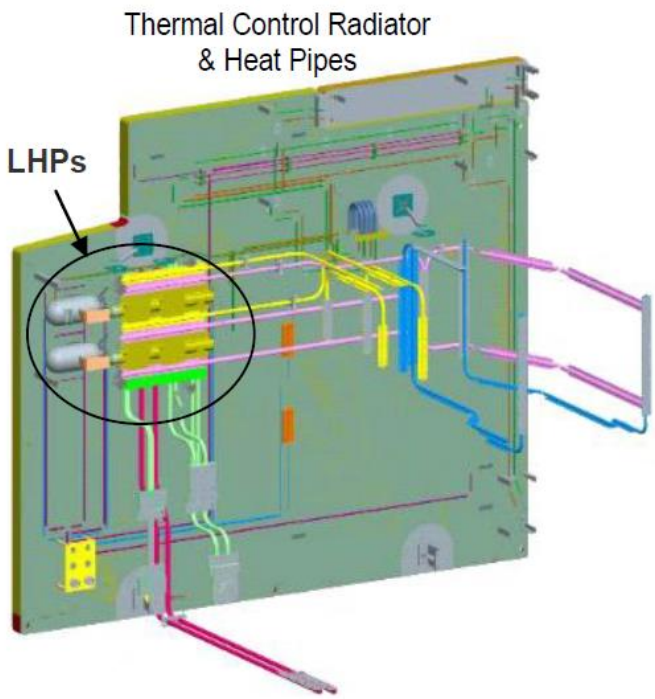

Figure 3-10. Thermal Control Radiator & Heat Pipes

Scan Shroud Assembly

The scan shroud assembly, as shown in Figure 3-11, consists of a series of shields that protect the internal instrument structure from direct solar loading through the optical port during the times in the orbit when solar energy enters the internal instrument cavity. The solar heat is collected within the metal shields and transported to the radiator/LHP assembly via constant conductance heat pipes.

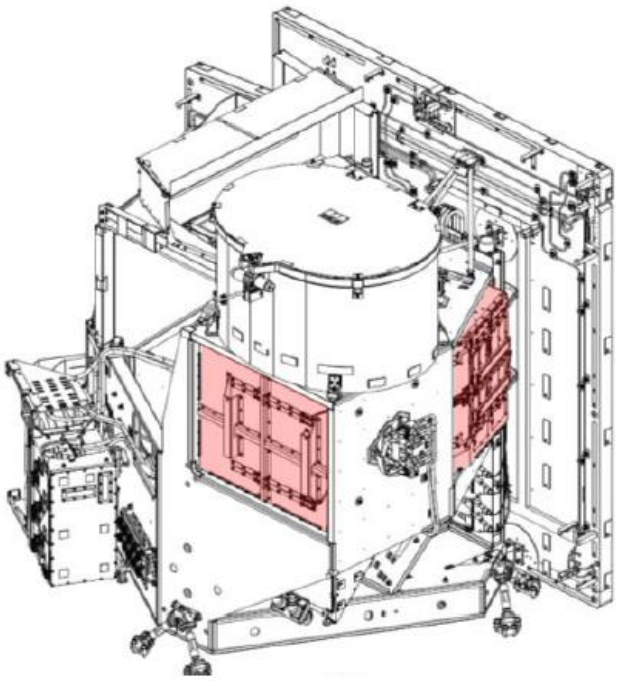

Figure 3-11. Scan Shroud Assembly

Cryocooler

The cryocooler cools the focal plane arrays to their requisite cryogenic temperatures. It is a two-stage pulse tube active cooler that pumps thermal energy from the focal plane arrays to the radiator/Loop Heat Pipe (LHP) Assembly. The crycooler is illustrated in Figure 3-12. The ABI has two redundant cryocoolers that can be operated individually or together. Each consists of a Thermal Dynamic Unit (TDU) and Cryocooler Control Electronics (CCE). The TDU consists of an integral cooler, remote cold head, and transfer line. Waste energy is pumped from the FPAs by the TDU to the loop heat pipes where it is transferred to the radiator and rejected to space.

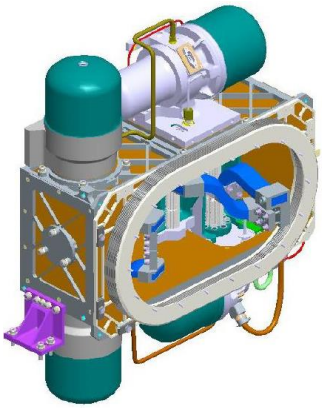

Figure 3-12. Active cryocooler thermal dynamic units mounted to aft optics

Heaters

ABI has several types of heaters located within the SU to maintain temperatures: survival, operational, and outgas. All heaters are fully Side1/Side2 redundant. The survival heaters are powered directly by the spacecraft via 70V power and ensure ABI stays at safe temperatures in the absence of operational power to ABI. The outgas heaters are used during the outgas phase of the mission to increase the temperature of the SU in order to drive off contaminates from the optical surfaces prior to cooling the Aft Optics to cryogenic temperatures. The operational heaters are used to control the temperature of the SU during operation. The operational and outgas heaters can have their control points and enable/disable status controlled via ground command. Power for survival heaters is controlled by spacecraft command, and their set points are controlled by fixed thermostatic switches.

Electronics

ABI's electronics are dispersed among the three units (Sensor Unit, Electronics Unit, and Cryocooler Control Electronics). The Electronics Unit contains the bulk of the CCAs and interfaces between the spacecraft and the other ABI units. The SUE, located in the Sensor Unit, contains CCAs needed to digitize the focal plane data and control SU mechanisms. The CCE controls the cryocoolers. The ABI electronics architecture is shown in Figure 3-13.

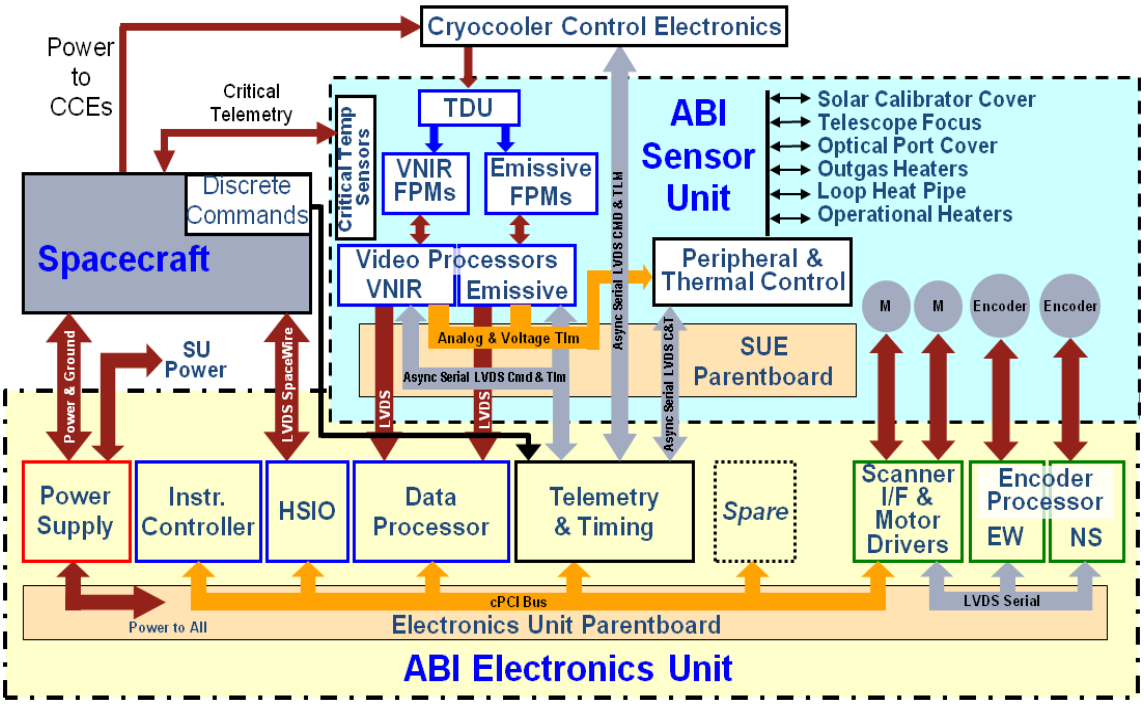

Figure 3-13. ABI Electronics Block Diagram

Sensor Unit Electronics

The SUE is comprised of the Video Processors (VPs) and the Peripheral and Thermal Control (P&TC) electronics. It is fully Side1/Side2 redundant. The VPs provide the interface between the focal plane arrays and the EU. The VPs generate timing signals and bias voltages used to read out the FPAs. They also collect the detector samples from the FPAs and format these data for transmission to the Data Processor in the EU.

The P&TC CCA provides thermal and mechanism control (with the exception of the scanner) for the Sensor Unit. The P&TC controls the temperature of the Internal Calibration Target (ICT), VNIR FPM, LHP heaters, and outgas heaters. The P&TC motor driver can switch between driving the Solar Calibration Cover (SCC) and the telescope focus motor. A serial command and telemetry interface is provided for receiving control information from the Telemetry & Timing (TNT) CCA located in the EU. The SUE also controls release of the Optical Port Cover (OPC) and SCC launch locks.

Electronics Unit

The Electronics Unit (EU) is the primary electrical interface between the spacecraft and the Sensor Unit. The EU contains the ABI power supplies and provides the instrument with command and control, data processing, telemetry gathering, and scan control. It consists of a chassis, parent board, and various CCAs. The parent board and CCAs are fully Side1/Side2 redundant. Functional descriptions of the EU CCAs can be found below in Table 3-6.

Table 3-6. EU Circuit Card Assemblies

CCA	Function
Power Supply	Converts the +28VDC voltage provided by the spacecraft to voltages required by ABI electronics
Instrument Controller (IC)	Single board computer that operates the ABI instrument
High Speed I/O (HSIO)	Communications with the spacecraft via SpaceWire
Data Processor	Formats and packetizes detector data provided by the Video Processor
Telemetry and Timing (TNT)	Generates systems clocks and handles ABI telemetry
Scanner Interface and Motor Driver (SIMD)	Controls the motion of the scan mirrors
EW and NS Encoder Processors (EP)	Power optical encoders and compute scan mirror position

Cryocooler Control Electronics

The two CCEs (one per cryocooler) mount directly to the spacecraft and contain the electronics and software required to operate each cryocooler's TDU mounted within the Sensor Unit. Waste heat from the CCE is rejected to the spacecraft. The CCE monitors the temperature of the cold head via a platinum resistant thermometer (PRT) and adjusts the duty cycle of the power amps to maintain the cold head at its set point temperature.

Operation

Collection of data by ABI is driven by scenes and timelines. A scene defines the region of interest to be scanned. Each scene is comprised of one or more straight line scans called swaths. A timeline is a schedule that defines when the swaths of each selected scene are collected and the duration. The primary benefit of ABI's swath-based timeline architecture is that the collection of swaths from multiple scenes can be interleaved. Below are a few definitions that are helpful in understanding how ABI collects data.

- Scene: commanded area to be observed; constructed from a set of ordered swaths
- Swath: sub-area of scene collected in a single scan defined by start and end coordinates. The scan can be a straight line at any angle but are typically west-to-east, parallel to equator
- Scan: scan maneuver during a swath at constant velocity (nominally 1.4° west-to-east)
- Stare: swath with same start and end coordinates typically used for calibration
- Slew: scan maneuver between swaths
- Timeline: defines what to observe when; it is a time-sequenced set of scene swaths and durations

While ABI is flexible in its ability to handle scene definitions, scenes are typically defined in a raster scan pattern as noted in the swath and scan definitions and depicted in Figure 3-14. This manner of scanning, made possible by the advanced scanner performance, has several benefits. It allows for a constant time interval across swath boundary, which minimizes temporal distortion. Image shear is also minimized as all swaths are collected in a similar direction.

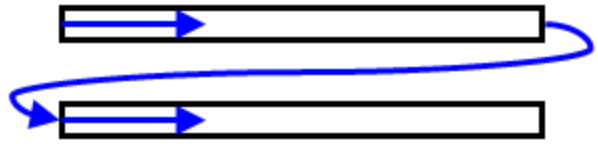

Figure 3-14. ABI Raster Scan

Fixed Grid Frame

All scenes on ABI are defined using the Fixed Grid Frame (FGF) coordinate system, which parameterizes the line-of-sight into elevation and azimuth angles. The z-axis points to nadir, the y-axis points south, and the x-axis points east, with the origin of the FGF coordinate system at the ideal sub-satellite point. Figure 3-15 offers two perspectives on the definition of angles within FGF.

- z-axis to center of the Earth (and ideal sub-satellite point)
- x-axis to east
- y-axis to south
-

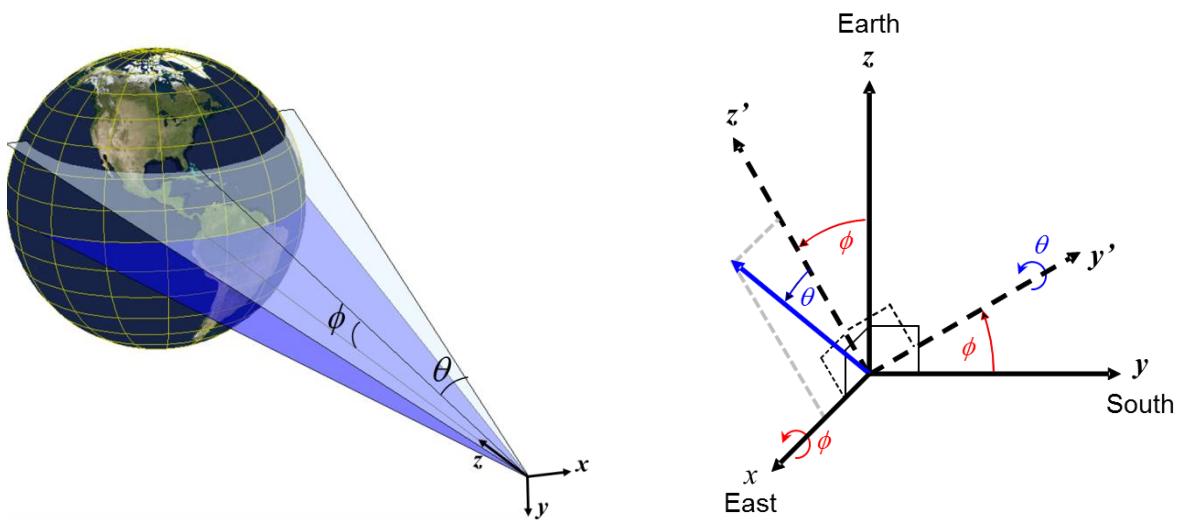

Figure 3-15. Fixed Grid Frame (Elevation-Azimuth Coordinate System)

This coordinate system aligns naturally to the two-mirror ABI scan system as the NS angle (ϕ) is simply rotation about the x-axis and the EW angle (θ) is rotation about the y'-axis (the rotated position of the y-axis). The roll and pitch angles are computed from the line-of-sight unit vector components using the equations:

$$\phi = -\tan^{-1}\left(\frac{y}{z}\right) \qquad \theta = \tan^{-1}\left(\frac{x}{z}\cos\phi\right) = \sin^{-1}\left(\frac{x}{\sqrt{x^2+y^2+z^2}}\right)$$

Optical angles are twice the mechanical angles. For a perfectly aligned scanner located at the ideal satellite position with the ideal attitude, the EW and NS Fixed Grid Angles for the instrument line of sight are simply twice the EW and NS scan mirror shaft angles, respectively. The navigation algorithm accounts for the slight deviations from this ideal case using various corrections.

The FGF also defines the spacing of pixels. The Nadir spatial pixel resolution of the collected imagery ranges from 0.5 to 1 km in the visible channels and 1 to 2 km in the infrared channels. The centers of the 0.5, 1, and 2-km pixels, as depicted in blue, green, and red, respectively, in Figure 3-16, are not coincident. This is done so that the nominal area corresponding to a 1-km pixel contains within it the nominal areas corresponding to four 0.5-km pixels. Similarly, the nominal area corresponding to a 2-km pixel contains within it the nominal areas corresponding to four 1-km pixels. The spacing of pixels in the FGF is uniform in fixed grid angles.

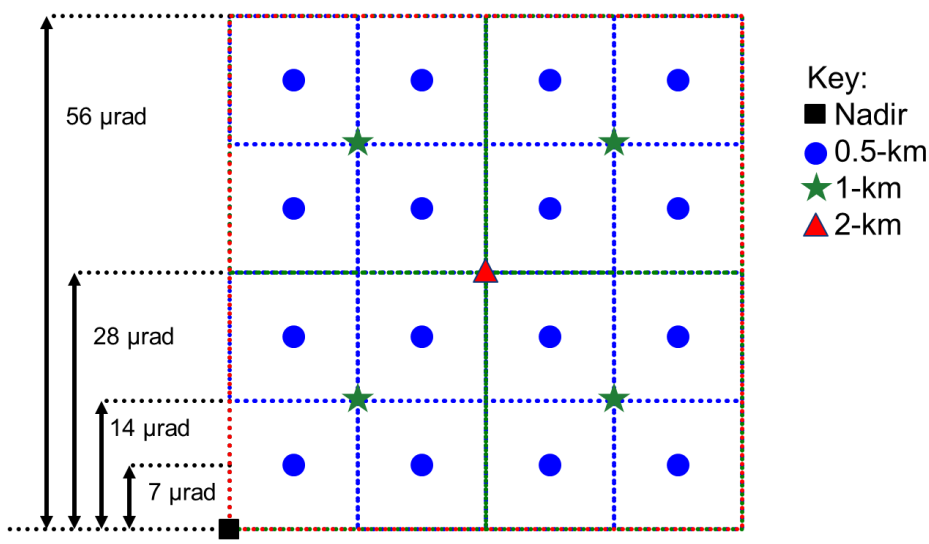

Figure 3-16. Pixel spacing in Fixed Grid Frame

Standard Earth Scenes

ABI operations consist primarily of three types of Earth scenes plus additional scenes necessary for radiometric and geometric calibration. As the calibration scenes are quietly processed in the background, this section will focus on the standard Earth scenes shown below in Figure 3-17. Full disk, CONUS, and mesoscale. The operators can define custom scenes as well, which can be uploaded anytime during the mission.

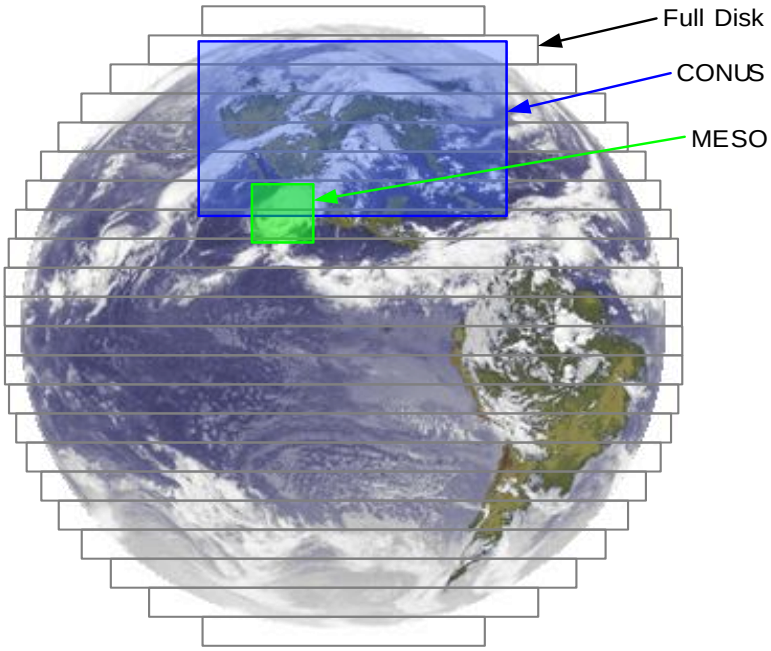

Figure 3-17. Full Disk, CONUS, and Meso Scenes

Full disk: Defined as a 17.4 degree diameter circle centered at nadir. It is comprised of 22 west-to-east swaths and is used in Scan Mode 3, 4, and 6 timelines. (Scan Modes are defined in a later paragraph.) The flight software automatically extends the defined swaths of the Full Disk scene off the Earth as part of a single scan motion to gather both full disk data and a look to space, or "spacelook", which is used for solar calibration.

CONUS (Contiguous U.S.): Defined as a 3000 km (NS) x 5000 km (EW) rectangle. It is comprised of 6 west-to-east swaths and is used in the Scan Mode 3 and 6 timelines. The definition of the CONUS scene is contingent upon the orbital position: GOES-East, GOES-West, or GOES-Central as shown in Figure 3-18.

Meso: Defined as a square 1000 x 1000 km area (at the satellite sub-point), which can be located anywhere within the ABI field-of-regard. It is comprised of 2 west-to-east swaths and is used in Scan Mode 3 and 6 timelines. There are two Meso scenes available within ABI that can be adjusted on-the-fly by commanding new center locations. This allows an operator to track hurricanes and other storm events by performing rapid revisits of these "mesoscale" phenomena.

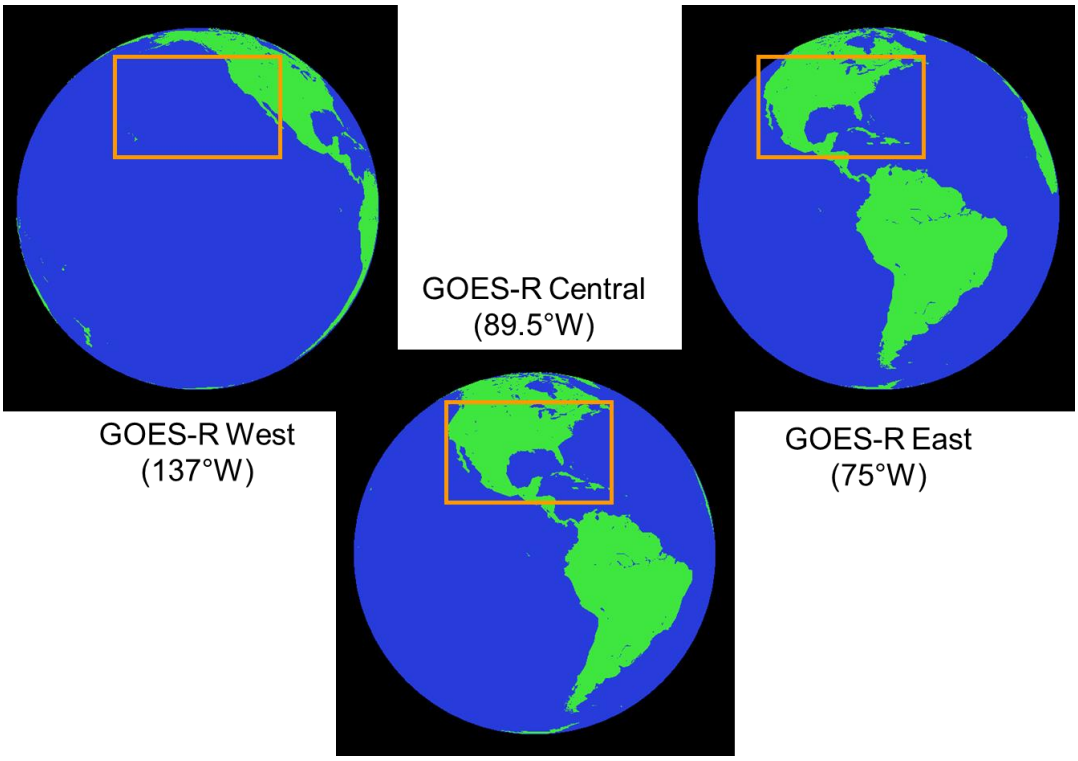

Figure 3-18. CONUS Scene for Each Orbital Position

Timelines

Timelines are the schedules that dictate when each swath in a selected scene is scanned. Each swath in a timeline is assigned a starting time and duration. The starting time is defined relative to the start of the timeline. The swaths of the various scenes included in the select timeline can be scanned in any order. A helpful analogy for timelines is a musical playlist as laid out in Table 3-7. The tracks of albums are akin to swaths of scenes, and just as a playlist can mix and reorder tracks of multiple albums, so too can a timeline interleave swaths from different scenes.

Table 3-7. Timeline / Playlist Analogy

ABI	MP3 Player
Scene	Album
Swath	Track
Scan	Listen
Slew	Change Tracks
Timeline	Playlist

To illustrate, a hypothetical timeline that includes two scenes is shown below in Figure 3-19. The figure contains depictions of two scenes: Scene A and Scene B. Scene A is comprised of three swaths and Scene B is made up of two swaths. This scanning begins 5.0 seconds after the start of the timeline to allow the scanner to slew to the starting coordinates and takes 3.0 seconds to scan. The second swath to be scanned is Swath 1 from Scene B, which will begin 10.0 seconds after the start of the timeline and requires 2.5 seconds. The 2.0 seconds between the completion of the scanning of the first swath in the timeline and the start of the second is added to allow for the scanner to complete its slew maneuver to the starting coordinates of the second swath. The remainder of the timeline continues with the interleaving of the swaths.

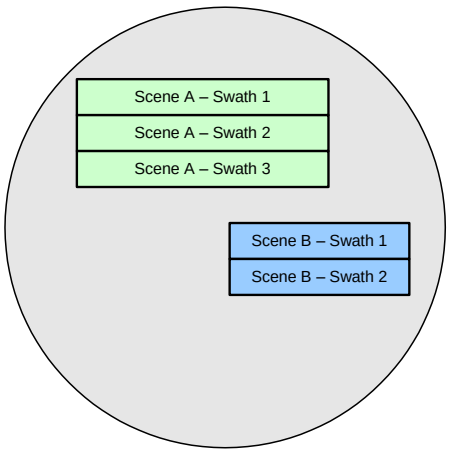

Example timeline

Activity	Start Time (seconds)	Duration (seconds)
Scan Scene A – Swath 1	5.00	3.00
Scan Scene B – Swath 1	10.00	2.50
Scan Scene A – Swath 2	15.50	3.00
Scan Scene B – Swath 2	20.50	2.50
Scan Scene A – Swath 3	26.00	3.00

Figure 3-19. Hypothetical Timeline Illustration

ABI Scan Modes

ABI has three primary scan modes: Scan Mode 4 collects just the full disk while Scan Modes 3 and 6 provide more flexible storm watch capability. Table 3-8 provides information on the refresh rate for the standard Earth scenes for each scan mode. Figure 3-20, Figure 3-21, and Figure 3-22 illustrate the standard timelines graphically with time-time diagrams for the three scan modes. Each row of these diagrams depicts 30 seconds of timeline activity.

Table 3-8. Scene Refresh Rates by Scan Mode

ABI Images (Scenes)	Image Collection Revisit Intervals [Minutes]				
	Scan Mode 4 (Continuous Full Disk)	Scan Mode 3 (Flex Mode)		Scan Mode 6 (Super Flex Mode)	
Full Disk	5	15		10	
CONUS	---	5		5	
Mesoscale #1	---	0.5	1	0.5	1
Mesoscale #2	---	---	1	---	1

Scan Mode 3: a 15-minute timeline that provides one full disk scene (every 15 minutes), three CONUS scenes (every 5 minutes), and 30 Meso scenes (one every 30 seconds or two at 1 minute intervals each). It also executes the necessary scenes for calibration (Infrared (IR) Calibration & Spacelook) and Image Navigation and Registration (INR) (star scenes).

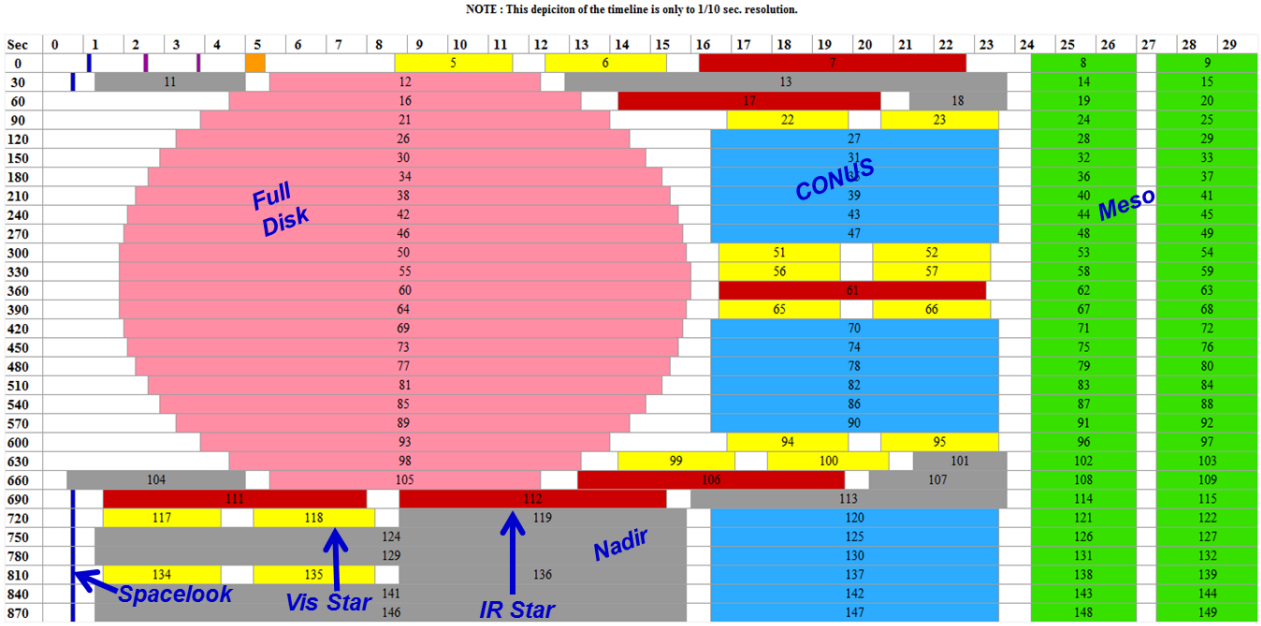

Figure 3-20. Scan Mode 3 Time-Time Diagram

Scan Mode 4: a 5-minute timeline that provides one full disk scene every 5 minutes as well as the necessary scenes for calibration (IR Calibration & Spacelook) and INR (Star scenes).

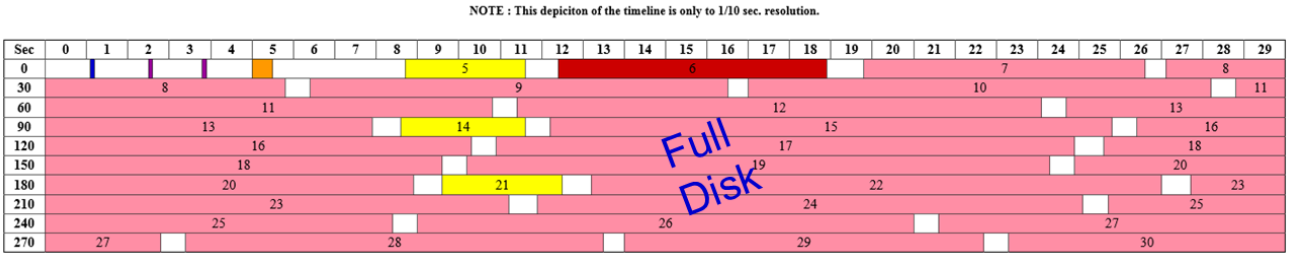

Figure 3-21. Scan Mode 4 Time-Time Diagram

Scan Mode 6: a 10-minute timeline that provides one full disk scene (every 10 minutes), CONUS scenes every 5 minutes, and one Meso scene every 30 seconds (or two scenes at 1 minute intervals). It also executes the necessary scenes for calibration (Infrared (IR) Calibration & Spacelook) and Image Navigation and Registration (INR) (star scenes).

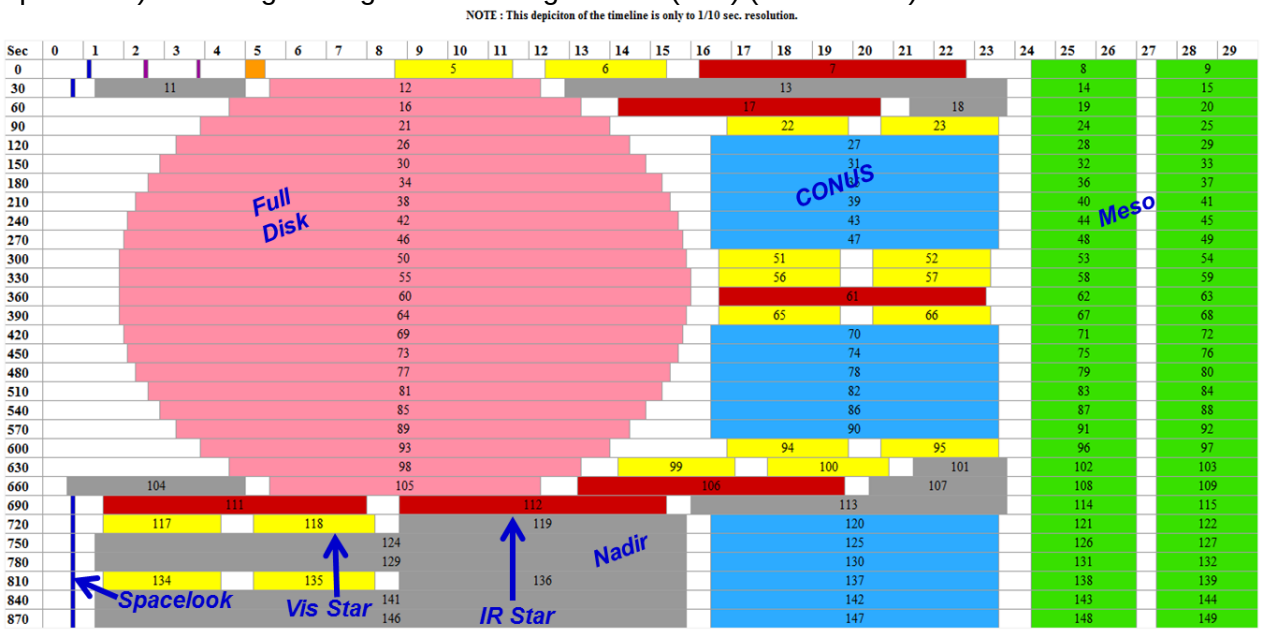

Figure 3-22. Scan Mode 6 Time-Time Diagram

Line-of-Sight Pointing Compensation

ABI has several functions within its Flight Software (FSW) to improve collection of its imagery. ABI receives orbit and attitude data from the spacecraft at 1 Hz and angular rate data at 100 Hz. It uses this information while computing scan operations to compensate for differences between measured and ideal orbit and attitude parameters. These functions can be disabled/enabled by ground command.

LOS Motion Compensation (LMC): corrects for scanner non-orthogonality, internal misalignments, and instrument-to-spacecraft misalignments. It is applied in real-time.

Spacecraft Motion Compensation (SMC): corrects for non-ideal attitude using attitude and gyro rate data. It is applied in real-time.

Orbit Motion Compensation (OMC): corrects for non-ideal orbital position. It is computed on a per-swath basis and adjusts swath end points prior to collection to remove bias but not swath curvature due to non-ideal orbital position.

Bright Object Avoidance

While computing its scan operations as defined by the commanded scenes and timelines, ABI will autonomously adjust its scan pattern to avoid scanning close to the center of the sun. The exclusion zone is a region around the sun that is designed so that swath truncation restricts the

field-of-view from reaching the edge of the sun. Depending on the sun location, swaths can be truncated on the east side, west side, or skipped altogether. The depth of the “bright object avoidance” outage varies by band due to the East/West position offsets between ABI spectral bands on the focal plane arrays. Each band has a different offset from the instrument line of sight (LOS), which means that the bands are not all viewing the same spot at exactly the same time. The offset between the extreme bands is approximately 1.5 degrees LOS. Figure 3-23 shows depictions of east-side and west-side truncation, and Figure 3-24 shows examples of truncations on full disk swaths.

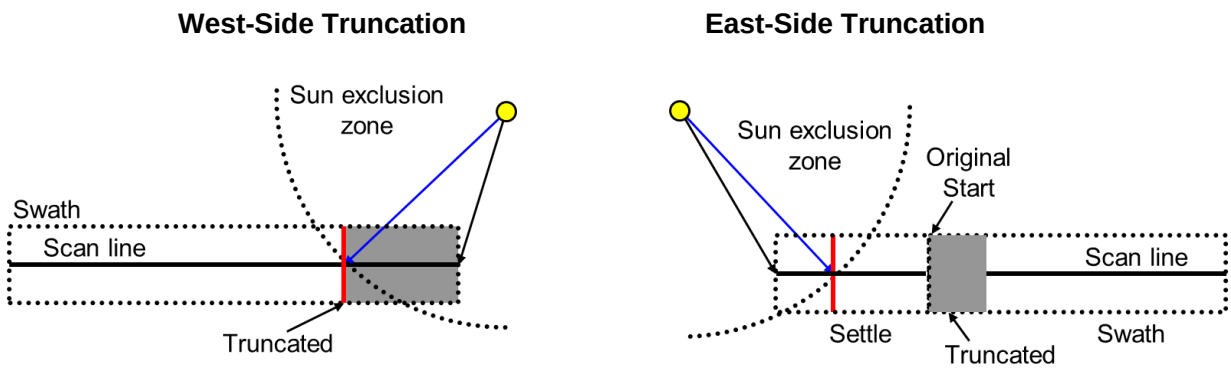

Figure 3-23. Bright Object Avoidance Swath Truncation

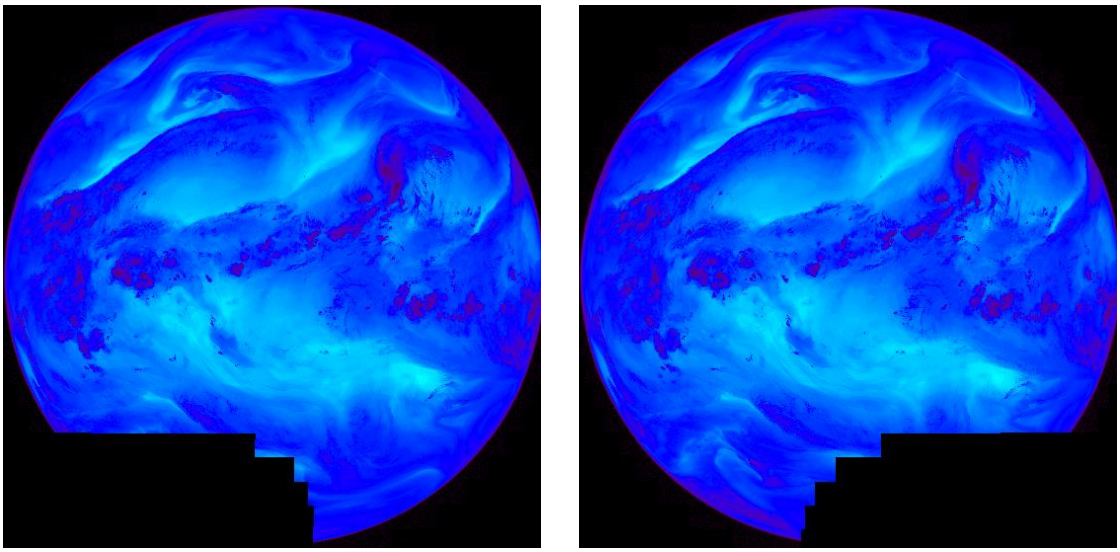

Figure 3-24. Examples of Swath Truncations on Full Disks Swaths

Radiometric Calibration

ABI conducts two types of radiometric calibration during operations. Calibration of the MWIR and LWIR channels is done with the Internal Calibration Target (ICT). The VNIR channels are calibrated with the Solar Calibration Target (SCT). Observations of space provide the background measurements for all channels.

Infrared Channel Calibration

Infrared calibration is conducted via observations of the Internal Calibration Target (ICT), a high-emissivity, full aperture blackbody calibration source based on a Harris-patented design. The ICT radiance value used for calibration is determined via its temperature, which is maintained at ~302 K. Calibration occurs at the start of each operational timeline to ensure the MWIR and LWIR channels have updated calibration coefficients for data collected during the timeline. This frequent calibration captures the effect of the constantly changing background temperatures of ABI itself. Each timeline begins with an observation of space to assess background radiance followed by an observation of the ICT.

Solar Calibration

Solar calibration is conducted via observations of the SCT, which is a partial-aperture, diffuse white surface that reflects sunlight into the optical system. It is part of the SCA within the OPSA. Solar calibration for the VNIR channels is not conducted frequently but on an as-needed basis. The constant energy of the sun reflecting off the SCT provides a known radiance source for calibration. Since a specific geometry with the sun must be achieved to ensure significant sunlight falls upon the SCT, solar calibrations can only be performed during a specific 15-minute window for any given date.

Ground Processing Algorithms

Ground processing is the method of converting downlinked ABI science data packets (Level 0) into calibrated, geo-located pixel images (Level 1B). This conversion is accomplished via the Ground Processing Algorithms (GPAs). ABI compresses the samples from a single detector element into a compression block via the onboard lossless Rice compression algorithm during the creation of the CCSDS packets. The process of converting packet data to pixels consists of four major steps (decompression, calibration, navigation, and resampling) as shown in Figure 3-25.

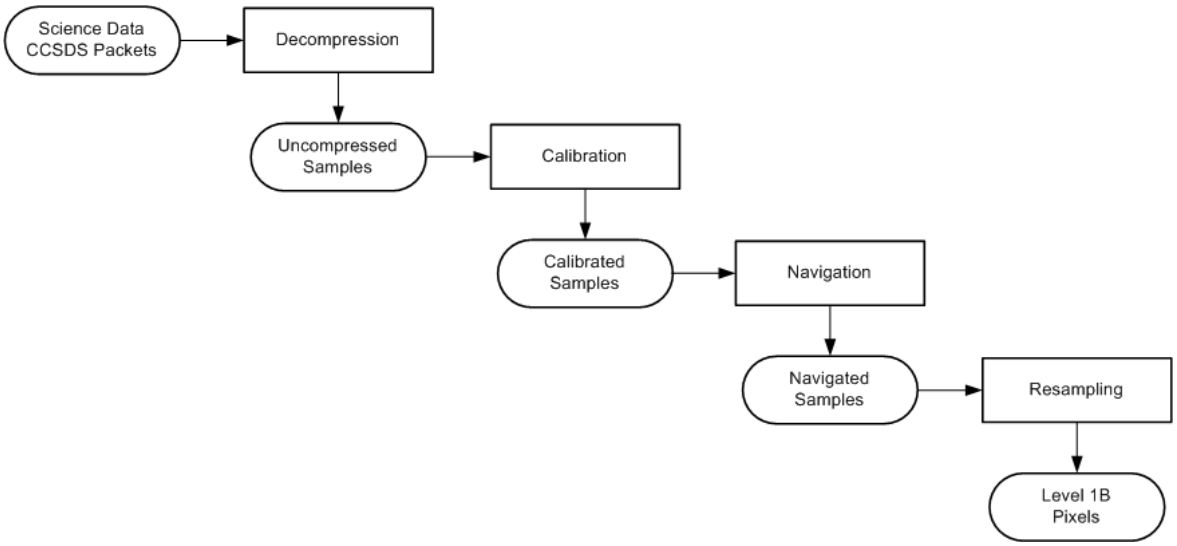

Figure 3-25. Ground Processing Algorithm Flow

Decompression: undoes the onboard lossless Rice compression during the creation of the CCSDS packets.

Calibration: converts raw instrument samples (digital counts) into calibrated radiance samples. The detector gain and offsets determined from observations of calibration targets (ICT/SCT) and space are applied to each detector sample. It includes a correction for scan mirror reflectivity and emissivity.

Navigation: determines the location of individual detector samples within the FGF. This process is a matter of applying a series of corrections to the scan encoder-reported location. It corrects for the offset of a single detector to the ABI LOS. It also applies corrections from non-ideal spacecraft attitude and orbit via a Kalman filter (a quadratic estimation algorithm) using data from the spacecraft combined with ABI star observations.

Resampling: estimates the value of an FGF pixel as the weighted sum of surrounding calibrated detector samples, where the weight assigned to each navigated detector sample is based upon its proximity to the selected pixel.

This page left blank

4. Geostationary Lightning Mapper

The GOES-R series Geostationary Lightning Mapper (GLM), manufactured for the NOAA/NASA GOES-R project by Lockheed Martin Space Systems' Advanced Technology Center in Palo Alto, California, is a nadir-pointed, high-speed video camera that detects the optical signature of lightning illuminating cloud tops at 777.4 nm, a wavelength associated with the neutral atomic oxygen emission line of the lightning spectrum. Mounted on the satellite's EPP, GLM provides hemispherical coverage with its 16-degree field of view, staring continuously at the cloud tops with a near uniform resolution of 8-14 km (8 km at nadir, increasing to 14 km at the edge of the field of view). The GOES-R flight model of GLM undergoing ground testing can be seen in Figure 4-1.

Figure 4-1. The Electronics Unit (EU) can be seen on the left, and the Sensor Unit (SU) on the right.

Remote Sensing of Lightning

Lightning mapping is the process of determining when and where lightning flashes occur. By measuring lightning, forecasters and researchers can monitor important parameters that indicate severe thunderstorm development, and predict the formation of tornadoes or the onset of other severe weather events. Most of the electrical energy generated by a thunderstorm is dissipated by lightning. The lightning flash rate is quantitatively related to the electrical energy generation in

a thunderstorm, and total lightning activity (including both cloud-to-ground and intra-cloud) closely mirrors thunderstorm development. Tracking of convective weather has important applications not just in severe weather “now-casting” but also in traffic flow management of air and sea transportation networks, and long-term climatological trending over decadal time scales.

A lightning discharge creates and excites atomic oxygen, which decays from its excited state by emitting photons at characteristic wavelengths. To detect a lightning flash, optical lightning mappers typically rely on a prominent oxygen triplet whose emission lines are near 777 nm. The transient optical signature of a lightning pulse diffuses through the surrounding cloud and illuminates a wide area of the cloud top, typically tens of km^2. The cloud medium is optically thick but absorbs very little at near-infrared wavelengths, so the resulting multiple scattering blurs the source geometry, and delays and time-broadens the pulses. Observed on the cloud top, each lightning flash consists of a series of short (less than one millisecond) strokes separated by several milliseconds as shown below in Figure 4-2.

An optical sensor positioned above the cloud top can thus sense the diffuse 777 nm glow from the individual optical pulses generated by the strokes without having a direct view of the lightning plasma channel itself.

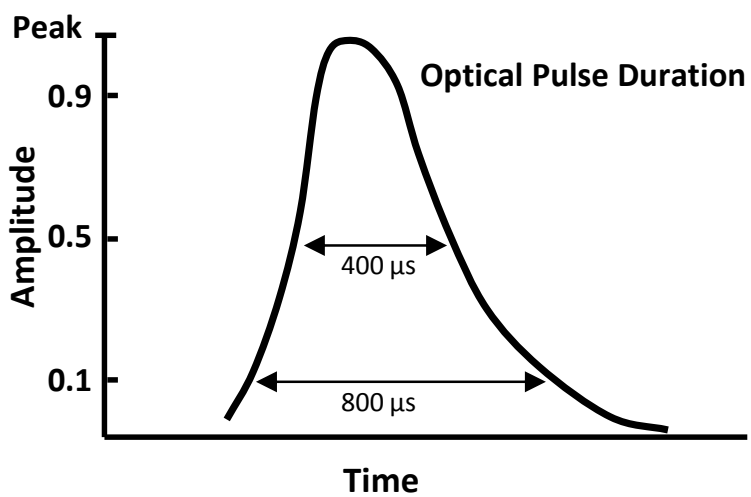

Figure 4-2. Typical Lightning Optical Pulse Profile

Detection of lightning is complicated by the presence of bright sun light reflected from the cloud top. (It is an unfortunate feature of lightning that it usually occurs in optically-thick cumulonimbus clouds that are particularly reflective). Using a one-nanometer-wide interference filter and a focal plane that operates at 500 frames per second, the cloud background created by reflected solar illumination can be subtracted and the transient lightning signal can be detected above the residual noise even under worst-case solar illumination conditions. Even with the high frame rate and narrow band filter, the background signal can still be orders of magnitude brighter than the lightning signal. Taking advantage of the characteristic temporal signature of lightning, where each flash typically consists of a series of strokes separated by several milliseconds and

generating temporally distinct optical pulses, a lightning mapper system can discriminate lightning even in the presence of various sources of noise and sensor artifacts.

A coverage map for GLM is overlaid on a worldwide flash rate map produced from Lightning Imaging Sensor/Optical Transient Detector (LIS/OTD) data in Figure 4-3. As can readily be observed, the majority of lightning occurs on land, and there is overlapping coverage of the contiguous United States from GOES-East and GOES-West. Based on a mean worldwide flash rate of approximately 45 flashes/sec, GLM is expected to see ~12 flashes/sec or ~1 million flashes/day on average, with much higher rates during peak periods of convective weather.

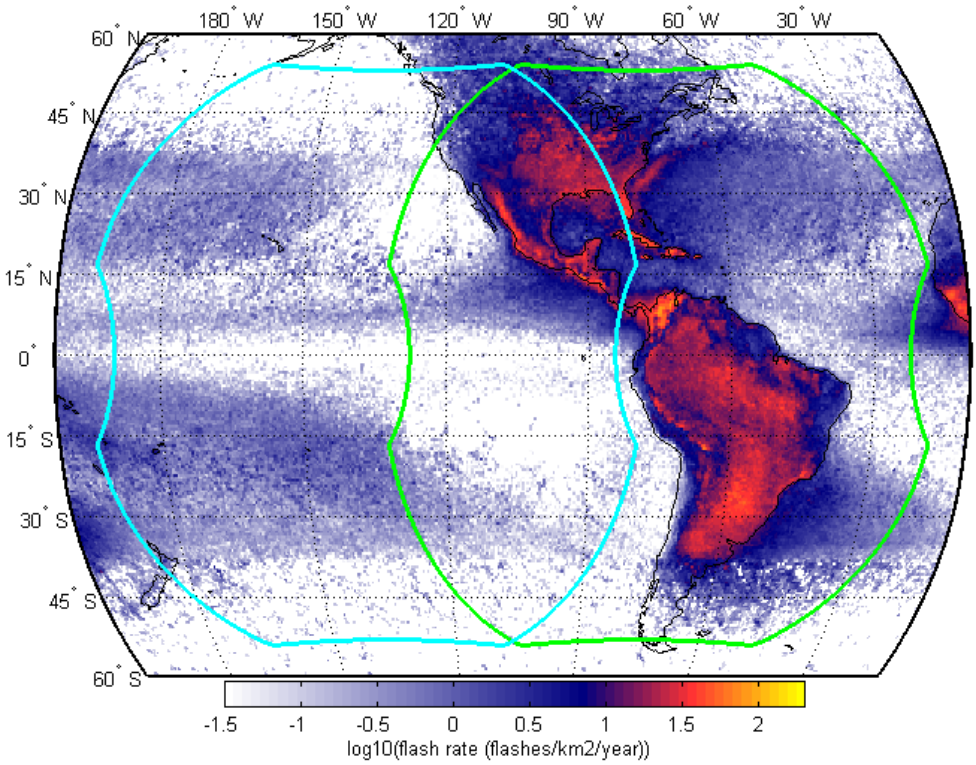

Figure 4-3. GLM coverage from GOES-East position (green) and GOES-West position (cyan), overlaid on a map of flash rate.

Instrument Design

GLM consists of a nadir-pointed Sensor Unit mounted on the satellite's Earth-pointing platform, and an Electronics Unit (EU) mounted inside the satellite bus. The two units are linked by an instrument wiring harness, as shown below in Figure 4-4. An electronics block diagram of the GLM is illustrated in Figure 4-5. Key instrument design parameters are listed in Table 4-1.

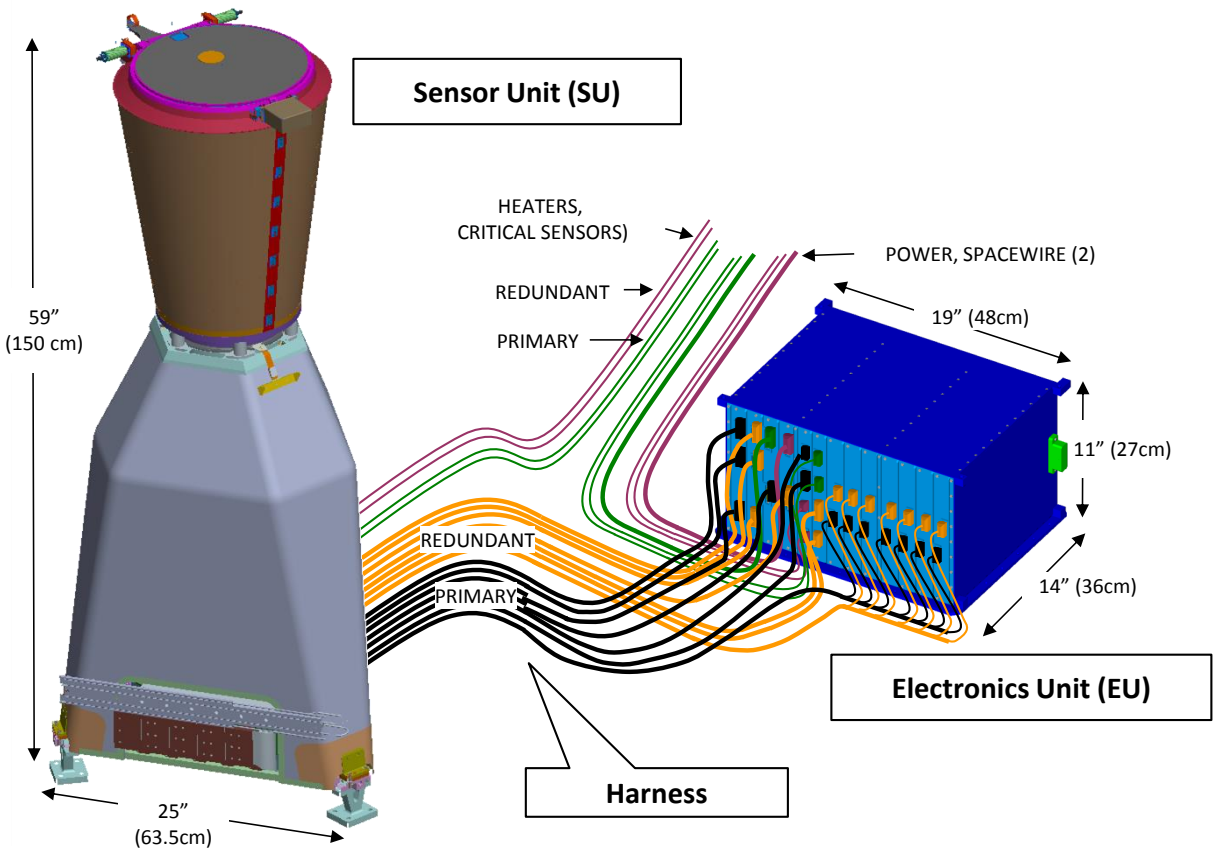

Figure 4-4. GLM Sensor Unit (SU), Harness and Electronics Unit (EU), with Approximate Sizes

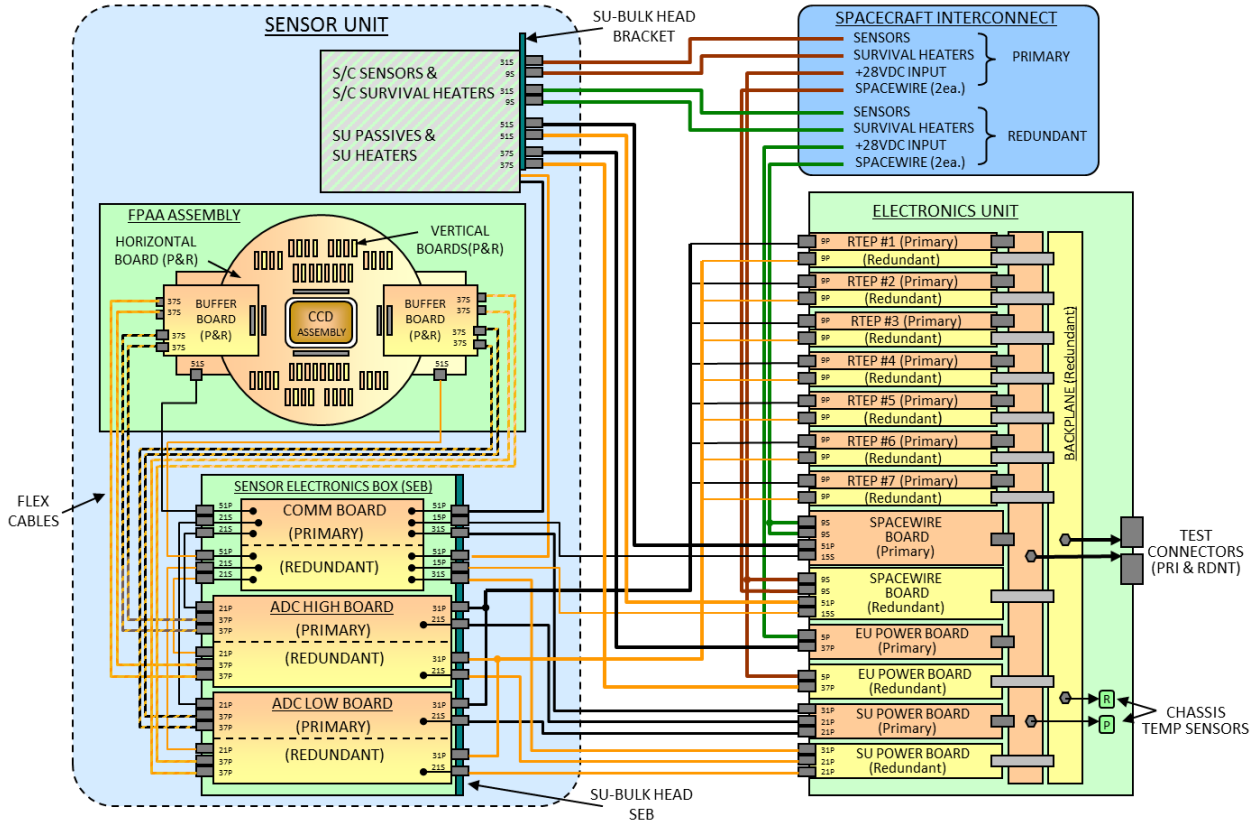

Figure 4-5. GLM Electronics Block Diagram

Table 4-1. Key GLM Instrument Design Parameters

Design Parameter	Value	Unit
Lens focal length	134	mm
Lens f number	1.2	-
Lens field of view	+/- 8	deg
CCD imaging area size	1372 x 1300	pixels
Pixel size (variable, up to)	30 x 30	µm
Well depth (variable)	2e6	electrons
Ground sample distance	8 – 14	km
Frame rate	503	fps
Filter center wavelength	777.4	nm
Filter band pass	1	nm
ADC resolution	14	bits
Event rate	≥1e5	sec^{-1}
Downlink rate	7.7	Mbps
Latency	<20	sec
Mass (total)	125	kg
Mass (Sensor Unit)	67	kg
Mass (Electronics Unit)	41	kg
Operational power	290	W
Flash detection efficiency (24 hr avg)	>80	%
False event rate	<5	%
Operating life	≥10	years

Sensor Unit

The SU uses a seven-element refracting lens with a field of view of 16 degrees, extending almost to the limb of the Earth, to form an image of the Earth disk on a Charge Coupled Device (CCD) focal plane. The lens assembly has an entrance pupil of 110 mm diameter, needed to collect enough lightning photons from the ~40,000 km range of geosynchronous orbit. The stray light design of the lens assembly is particularly challenging due to the sun coming very close to the field of view during eclipse entry and exit.

The SU lens assembly contains three interference filters of increasingly narrow spectral width: a solar rejection filter (SRF) at ~30 nm full-width half-maximum (FWHM) that performs the task of rejecting the bulk of out-of-band solar radiation, a solar blocking filter (SBF) at ~3 nm FWHM, and the key narrow band filter (NBF) at ~1 nm FWHM centered on the lightning triplet. Due to their large size and stringent spectral requirements, these filters pushed the boundaries of manufacturing capabilities.

The SU camera electronic assembly is known as the Focal Plane Array Assembly (FPAA) and is seen in both Figure 4-5, and Figure 4-6. It contains the CCD, associated clock drivers and biasing circuits, and analog amplifier stages to read out the 56 parallel outputs at a pixel rate of 20 MHz. The FPAA contains 55 separate circuit cards mounted in a cold plate chassis, to which the CCD is bonded. The FPAA is mated to the lens assembly with three shims that set the focus of the camera to a precision of approximately 10 microns. The FPAA is partly redundant (single-string CCD and output amplifiers) and outputs 56-channel analog video.

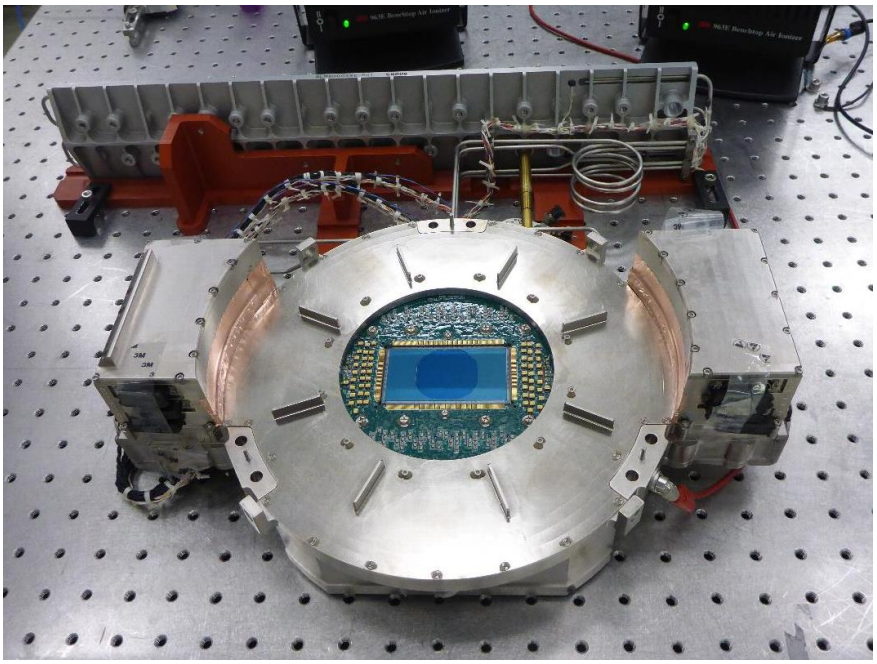

Figure 4-6. The GLM Focal Plane Array Assembly (FPAA), mated to Loop Heat Pipe (LHP condenser plate at top mates to radiator). The CCD is visible at the center (blue rectangle) with the circular thinned area onto which the Earth is imaged. Red frame is for ground handling.

Flex cables carry the analog video to the SU digitizer, known as the Sensor Electronics Box (SEB), which processes the analog FPAA output into digital video for processing by the EU. The SEB contains the Analog to Digital Converters (ADCs) and associated input circuits, power conditioning circuits, digital logic to support SU command and telemetry, and electronics that assemble the digital video stream. The SEB is fully redundant and outputs 56-channel digital video with a resolution of 14 bits, serialized into 14 parallel SERDES (SERializer-DESerializer) links operating at 1.6 GHz.

The SU structure, visible in Figure 4-7 consists of a titanium/carbon fiber hexapod, with struts having a zero coefficient of thermal expansion (CTE) for pointing stability. The thermal design of the SU isolates the lens assembly as much as possible, providing a stable thermal environment with minimal thermo-mechanical distortion. A skirt-like carbon fiber honeycomb structure known as the baffle support encapsulates the SU optics and electronics (not shown). The entrance optics are fitted with a baffle and door assembly, to protect the optics during launch and orbit raising, and to keep direct sun away from the optics to the extent possible. The door is a single-

deployment, spring-loaded mechanism released by a redundant High Output Paraffin Actuator (HOPA) some weeks after reaching Geosynchronous Earth Orbit (GEO), following a period of outgassing. It is the only mechanism in the GLM instrument. The digital video signal from the SU is carried across the 4-meter instrument harness to the EU, located inside the satellite bus.

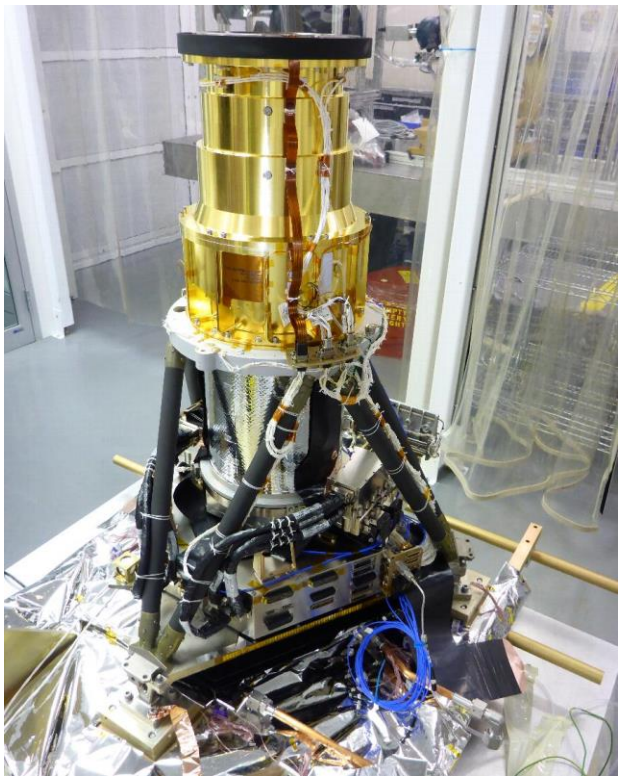

Figure 4-7. View of the interior of the GLM Sensor Unit during preparations for thermal vacuum testing, with exterior baffle support removed, revealing lens assembly (top), hexapod (lower half), FPAA (middle, partially hidden behind Metering Tube and harnesses) and SEB (bottom).

Electronics Unit

The EU contains image processors known as Real Time Event Processors (RTEPs), the SpaceWire communications board, and the power supplies. The EU is a fully redundant unit with 13 electronic modules that plug into a back plane, as diagrammed in Figure 4-8. A photograph of the EU is provided in Figure 4-9.

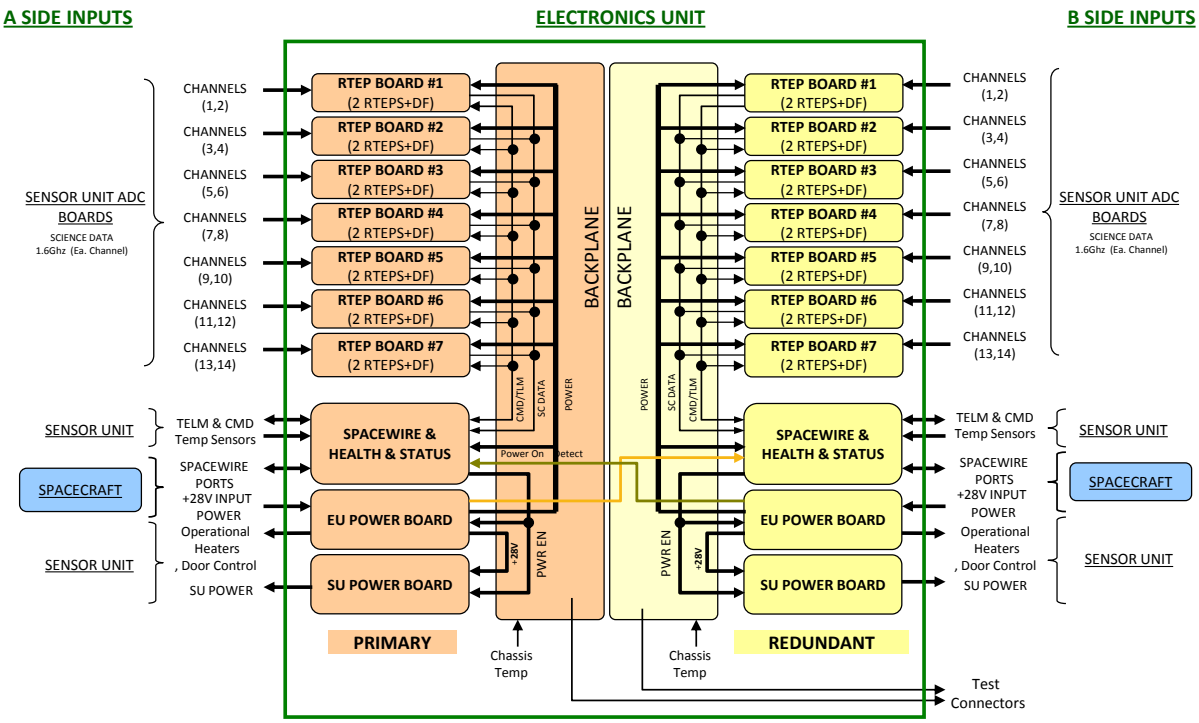

Figure 4-8. Electronics Unit physical block diagram. Note the Real Time Event Processor (RTEP) boards are assembled into seven modules with a primary and redundant board each; the total number of physical modules in the EU chassis is 13.

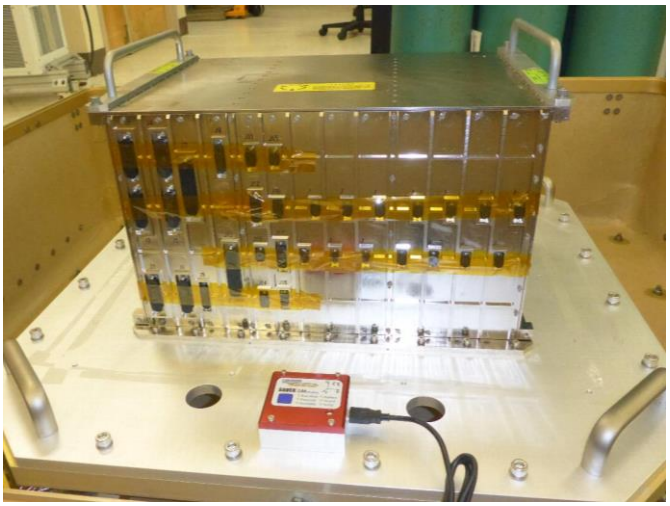

Figure 4-9. The GLM Electronics Unit being readied for shipping. From left to right, the card modules are: 2x SU power supplies, 2x EU power supplies, 2x SpaceWire modules, and 7x redundant RTEP modules. Red unit in foreground is an environmental recorder used for monitoring conditions during shipping.

Seven identical RTEP modules each receive two streams of 1.6 Gbps SERDES data from the SU, for a total of eight subarrays handled by each module. The RTEP modules contain the RTEP event detection logic, implemented in Field Programmable Gate Arrays (FPGAs) with off-chip memory for storage of the background average. Event data are stored in one FIFO (First In, First Out) queue per subarray, and then formatted in groups of four subarrays by the DF (Data Formatter) logic that sends formatted event data to the SpaceWire board for downlink.

All command and telemetry into and out of GLM is controlled by the SpaceWire module. The SpaceWire module generates CCSDS packets from the event data, and sends them along to the spacecraft for downlink using the GOES-R Reliable Data Delivery Protocol (GRDDP). GLM does not have a microprocessor; all of the functions related to command and telemetry, time keeping, data formatting, thermal control, and fault management are performed by an FPGA and the SpaceWire Application Specific Integrated Circuit (ASIC), which provides dual redundant data links to the spacecraft clocked at 132 MHz. The SpaceWire module also performs ADC of analog temperature sensors found throughout the instrument.

The GLM on-board software is stored in Electrically Erasable Programmable Read-Only Memory (EEPROM) that can be updated on orbit. The EEPROM also stores configuration tables for the numerous FPGA registers that control operation of the instrument. In operation, these tables are copied into Random Access Memory (RAM) with Error Detection and Correction (EDAC) protection to provide resilience against single-event effects from the radiation environment.

The EU also contains the power boards for the EU and the SU. These boards take the +28 V DC spacecraft primary power input and generate the various secondary regulated voltages used by the SU and EU components via DC to DC converters.

Event Detection Operation

As a digital image processing system, GLM is designed to detect any positive change in the image that exceeds a selected detection threshold. This detection process is performed on a pixel-by-pixel basis in the RTEP by comparing each successive value of the pixel (sampled at 500 Hz in the incoming digital video stream) to a stored background value that represents the recent history of that pixel. The background value is computed by an exponential moving average with an adjustable time constant. A longer time constant reduces background noise but increases lag of the background when the pixel illumination changes, such as when the cloud scene evolves. If the difference between the latest pixel value and its background average value exceeds the detection threshold, an event is generated, as illustrated for just one of ~1.5 million pixels in the example time history of Figure 4-10. The figure shows a single event occurring at frame 49.

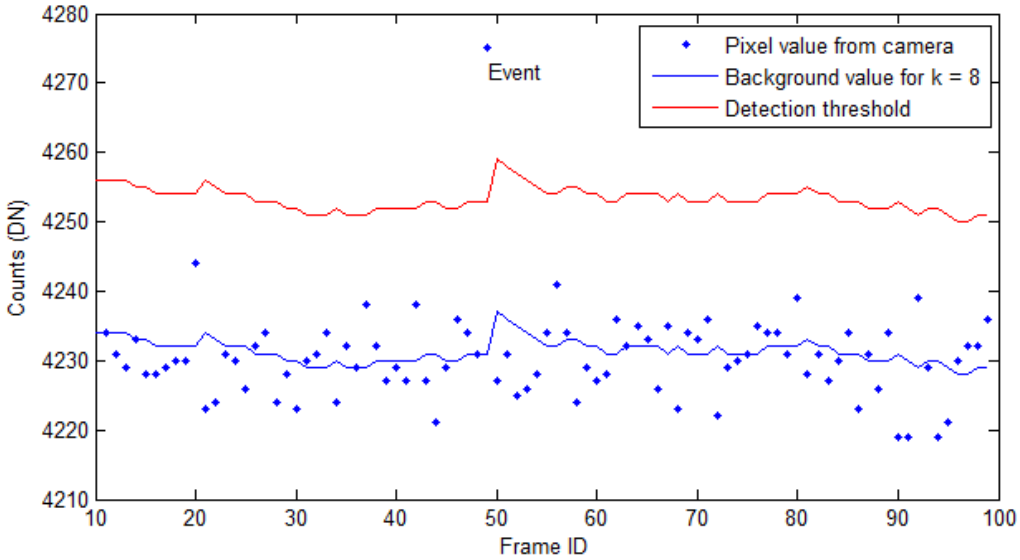

Figure 4-10. Time history of a single pixel. A single event occurs at frame 49. Note how background reacts in frame 50. K is the value of the background time constant; higher values of k incorporate more frames into the exponential average.

A simplified functional block diagram of the event detection logic is provided in Figure 4-11. The detection threshold is determined on a channel-by-channel basis, among 32 different values selected by table lookup based on the brightness of the background as reported with each event (see table 4.2). This allows the detection threshold to be increased in accordance with the brightness (and associated shot noise) of the cloud background signal to maintain a constant rate of false events regardless of illumination.

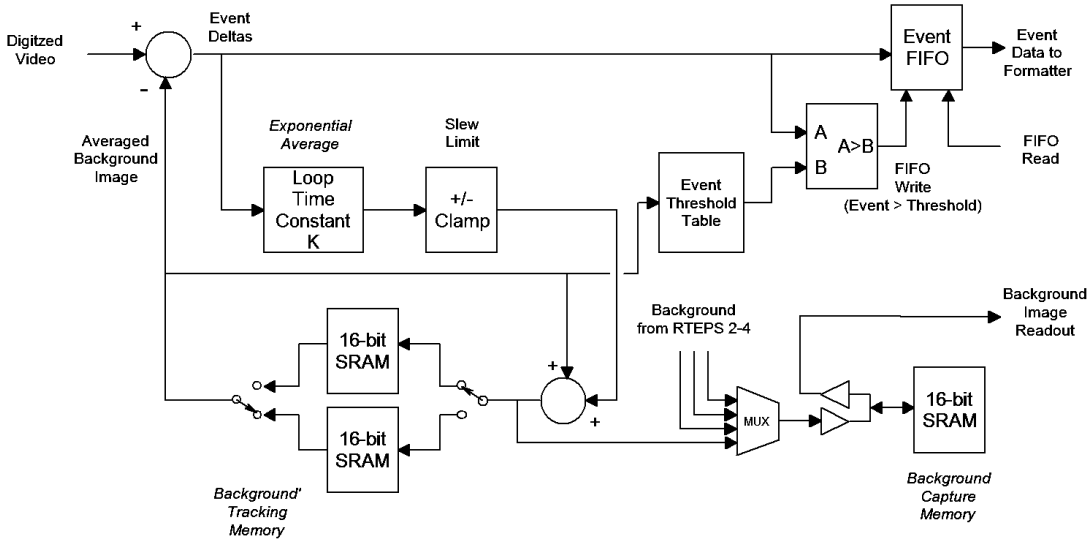

Figure 4-11. Simplified Functional Block Diagram of RTEP Event Detection Logic

An event is a 64-bit data structure describing the identity of the pixel, the camera frame (i.e. time) in which it occurred, its intensity with respect to the background, and the value of the background itself. The data structure for one event is shown below in Table 4-2. Device status and consecutive event status are internal status flags relating to internal details of the detection logic of the RTEP. Events make up the bulk of the GLM science telemetry downlink, and are therefore optimized to fit within just 64 bits.

Table 4-2. Data Structure for One Event

Normal Event			
Bit Position		**Data**	**# Bits**
0	2	Packet ID	3
3	9	Device Status	7
10	11	Zero fill	2
12	13	Consecutive Event Status	2
14	23	Frame ID	10
24	27	Data Formatter ID (0-13)	4
28	29	RTEP ID (0-3)	2
30	44	Pixel within RTEP (0-31849)	15
45	58	Intensity	14
59	63	Background Most Significant Bits (background bits 0 to 4)	5

Performing on-board image processing in the RTEPs and reporting changes in the Earth scene by exception only (when an event is triggered) reduces the downlink data bandwidth of the instrument to a reasonable level, from 14 bits/pixel * (1372 * 1300) pixels/frame * 500 frames/sec = 12.5 Gbps of raw video data to just ~6 Mbps of processed event data. This is equivalent to a video compression factor of greater than 2,000.

The intensity of lightning pulses, like many phenomena in nature, approximately follows a power law. There are relatively fewer bright and easily detectable events, and a “long tail” of dim events that eventually get drowned out by instrument noise. To achieve high detection efficiency, GLM must reach as far into this long tail as possible by operating with the lowest-possible detection threshold. The challenge of lightning event detection is then to lower the detection threshold so low that it starts flirting with instrument noise, where random excursions in the value of a pixel can trigger a so-called “false” event that does not correspond to an optical pulse. The ratio of the detection threshold to the standard deviation of the underlying instrument noise is known as the threshold-to-noise ratio, or TNR, and is typically set to about 4.5, meaning that a 4.5-sigma positive deviation from the mean value of the pixel will trigger an event. While a 4.5-sigma event has only a 1 in 3.4 million chance of happening in any given pixel and any given camera frame, when scaled up by the frame rate and the number of pixels, there will typically be several thousand noise false events per second.

There are numerous other sources of “false” events, such as the GEO radiation environment (energetic particles that strike the focal plane and generate spurious streaks of light), the sun

glinting off the surface of the ocean, lakes or rivers, and various instrumental effects. The GLM flight hardware has no way of distinguishing these from lightning; indeed, the event telemetry stream contains only a minority of lightning events that must be sifted out by ground processing, where much more powerful algorithms can be employed than on board the flight hardware.

In addition to the event data stream, GLM downlinks a background image every 2.5 minutes (i.e. every ~75,000 frames), using only a small portion of the downlink. This background image (shown in Figure 4-12) consists of the averaged value of each pixel as stored in RTEP memory, and is not a raw camera frame from the Sensor Unit. Background images are used in the process of event navigation, where daytime Earth scenes are analyzed for the location of coastlines. Based on the known locations of these coastlines, the geodetic location of each GLM pixel can be derived on the ground. In the near-infrared band where GLM operates, the contrast between vegetation and water is strong, which facilitates this process of coastline identification. Background images are also used in certain ground processing event filters and help to assess the quality and reliability of GLM data products.

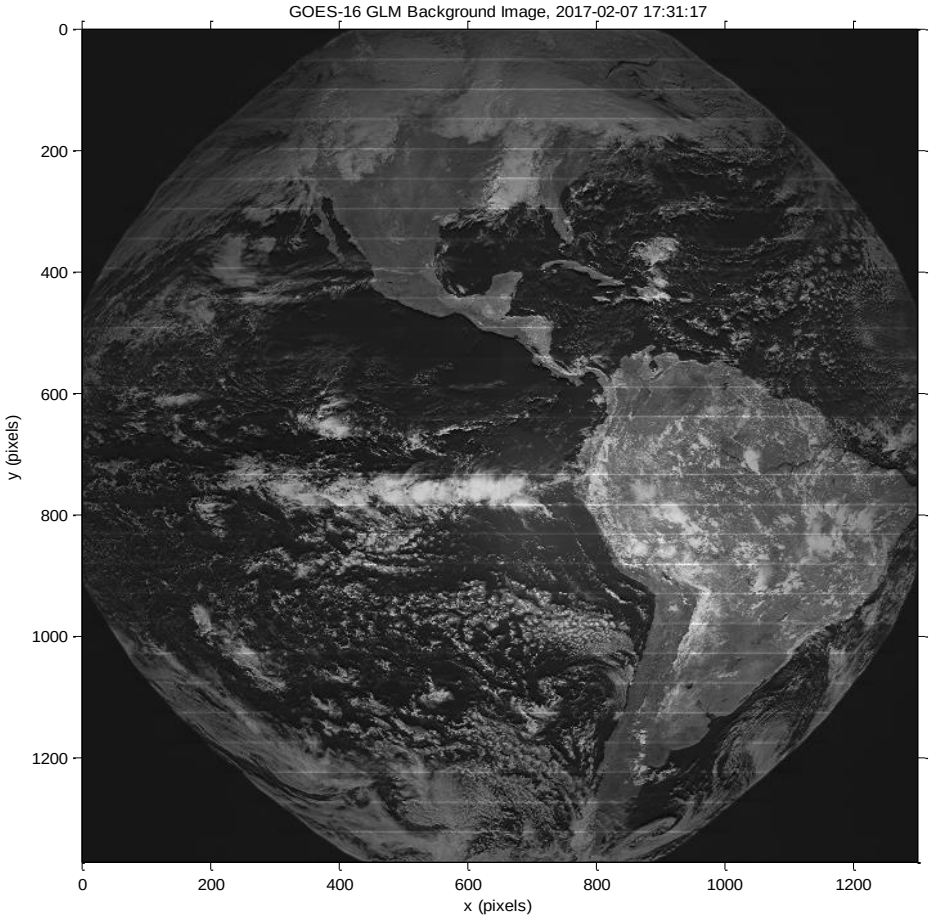

Figure 4-12. Background image from GLM on GOES-16. This image is displayed at fixed pitch, which effectively stretches the edges of scene. Note the strong contrast between land and water.

Focal Plane

The GLM focal plane, located in the Sensor Unit's FPAA, is a purpose-built solid state CCD with an overall size of 1372 x 2624 pixels, and an image area of 1372 x 1300 pixels. The CCD is a frame-transfer device, where each half of the previous image frame is stored in a peripheral area of the chip that is not sensitive to light, allowing readout of the previous image frame in parallel with exposure of the current image frame. The frame transfer architecture enables shutter-less operation at 500 frames per second. The CCD is backside thinned to improve quantum efficiency (QE) over an area matching the image size of the Earth disk on the focal plane. Each pixel of the CCD has a large charge capacity of approximately 2 million electrons (varying proportionally to pixel area), which accommodates the background signal from sunlight reflected by clouds while still providing enough head room to detect lightning. The deep well helps to increase the signal to shot-noise ratio for lightning detected during daytime.

The focal plane is sub-divided into 56 physical regions, each 49 pixels tall by 650 pixels wide, known as subarrays. Each subarray is read out in parallel and has an independent signal chain consisting of amplifier, ADC, and RTEP event detection.

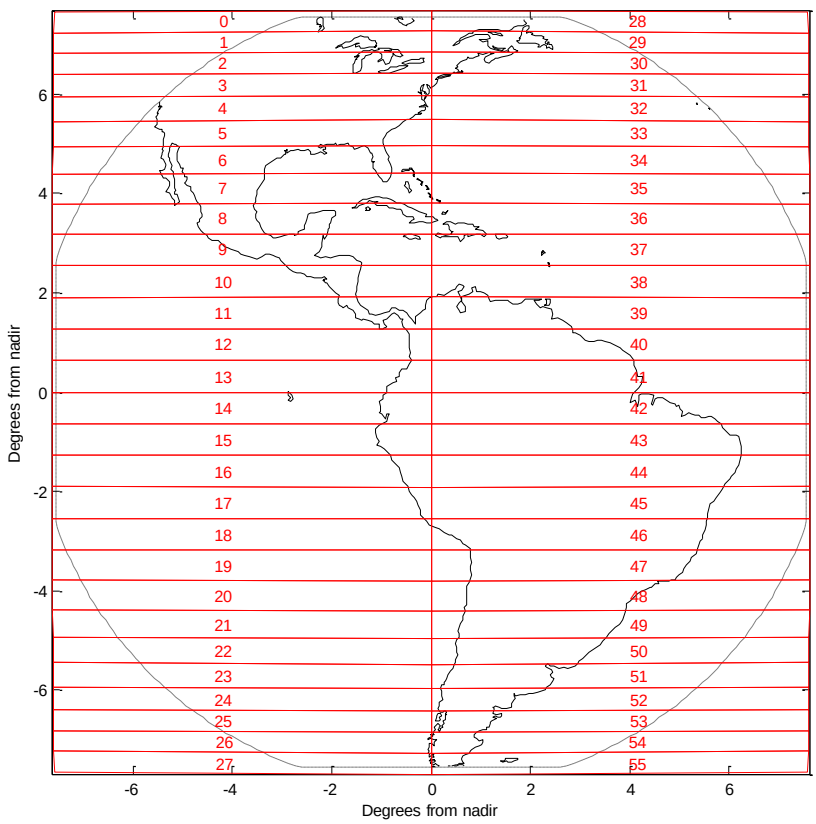

Figure 4-13. The subarrays and their numbering, overlaid with typical coast lines as might be imaged onto the focal plane from the GOES-East position (no yaw flip). Dotted line is the periphery of the backside thinned image area.

The subarrays near the top and bottom of Figure 4-13 appear shorter than those at the center due to the variable pitch of the GLM pixels. The GLM CCD was designed such that the Ground Sample Distance (GSD), the projected area of each pixel on the Earth's surface, is approximately constant with a target value of 8 km matched to the typical size of a storm cell. When following the development of severe thunderstorms it is important to track the lightning flash rate of individual storm cells; therefore, constant ground sample distance over the Earth is preferred.

Near the edge of the field of view, this design (patented under U.S. Pat. 8063968) uses reduced pixel pitch to compensate for the foreshortening as the view shifts away from nadir. This ensures that the cloud background signal (and its associated shot noise, associated with the particle nature of light) is minimized while lightning signal is maximized, thus preserving a good signal-to-noise ratio near the Earth's limb. The resulting GSD over the contiguous United States is shown in Figure 4-14. The largest pixels, near nadir, are sized 30 x 30 µm, with pitch reducing in steps to the smallest size of 20 x 24 µm.

The vertical and horizontal discontinuities in the GSD reveal pixel pitch boundaries. The overlapping coverage from GOES-East and GOES-West will ensure that every location in the conguous United States is covered with a GSD of 11 km or better.

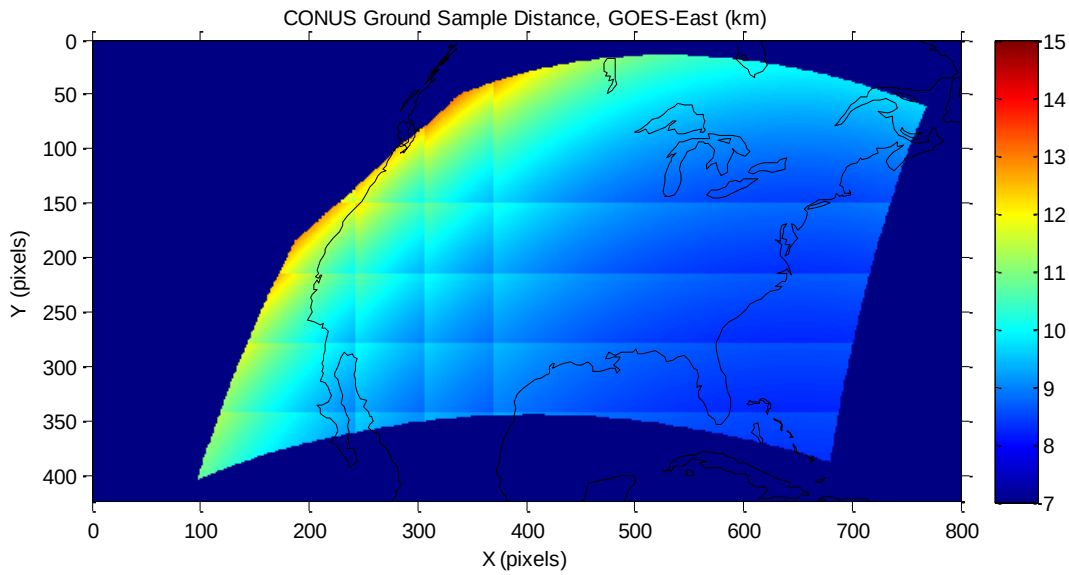

Figure 4-14. Ground sample distance (GSD) over CONUS. In this GOES-East visualization, CONUS is located in the top left corner of the GLM image; the full image is 1372 x 1300 pixels.

Each subarray is read out in parallel with the pixel ordering shown in Figure 4-15, which is reflected in the raw science telemetry stream from the instrument.

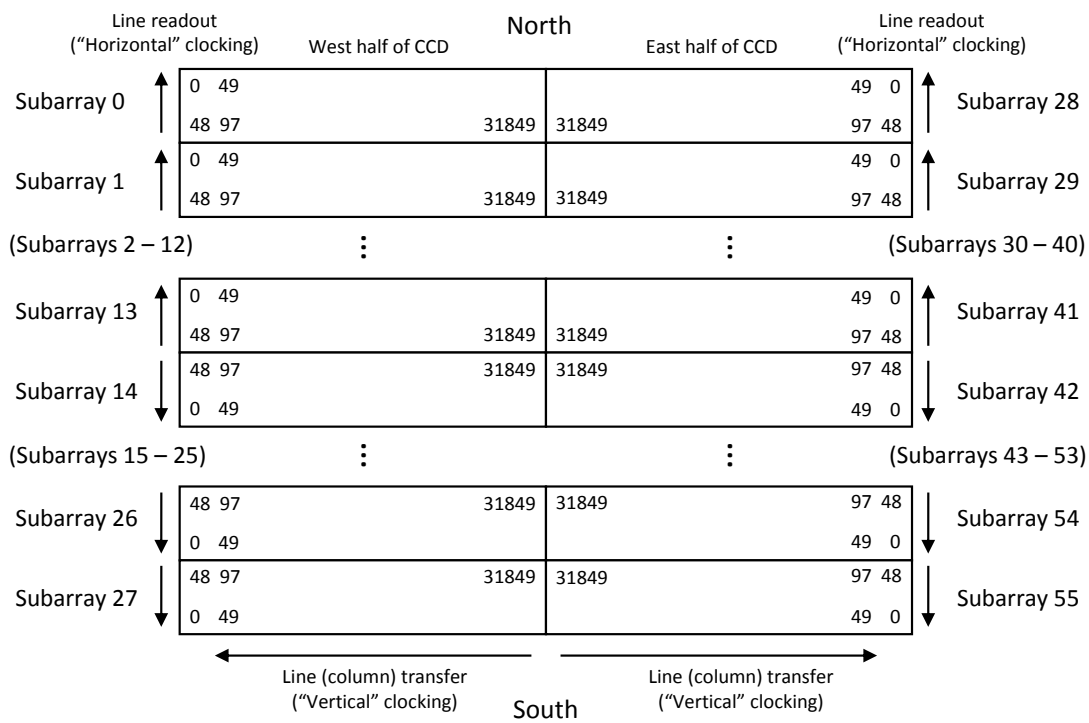

Figure 4-15. Pixel Numbering Convention and Readout Direction of the Focal Plane

Thermal Control

The Electronics Unit is wet-mounted to a thermally controlled panel inside the satellite bus, and is conductively cooled through its base plate.

The Sensor Unit is cooled by an external radiator dedicated to GLM, on the +Y side of the satellite. Waste heat from the FPAA is transported to the radiator by a LHP. This dual redundant LHP is actively controlled by the on-board software and provides variable thermal conductance as needed to maintain a constant temperature at the focal plane. Waste heat from the SEB is transported to the radiator by thermal straps, consisting of flexible stacks of aluminum foil layers. Both the LHP and thermal straps were designed to impart the lowest possible disturbance forces on the Sensor Unit, so as to minimize thermo-mechanical distortions that could cause errors in the navigation of lightning events.

All three spectral filters (SBF, SRF and NBF) are temperature-controlled using operational heaters, to maintain a stable center wavelength. Spectral stability becomes important when the band pass is as narrow as 1 nm; active heater control prevents large temperature drifts that could push the center wavelength away from the oxygen triplet and start cutting off the lightning signal.

The sensor unit is designed to thermally isolate the lens assembly to the maximum extent possible. From the outside in, this isolation is accomplished by MLI (multi-layer insulation) thermal blankets, the baffle support structure itself (coated on the inside with a low-emissivity surface), and the gold plating on the lens assembly.

Survival heat when GLM is not operating is provided by thermostatically controlled survival patch heaters located on the SU lens assembly, and prevent the lens assembly and nearby electronics

from cooling below their rated temperature range. These survival heaters are supplied by +70V DC power from the spacecraft.

Operational Modes

GLM has a very simple concept of operations, with a small set of states and modes as shown in Figure 4-16. The bold line in the figure is the auto-boot path, which occurs during power up without commanding and if no errors occur. Normal mode is reached within a few hours of power on, with the timeline being driven by the slow thermal responses involved in LHP start and filter heaters. Once in normal mode, GLM generates science telemetry (events and backgrounds) and housekeeping telemetry.

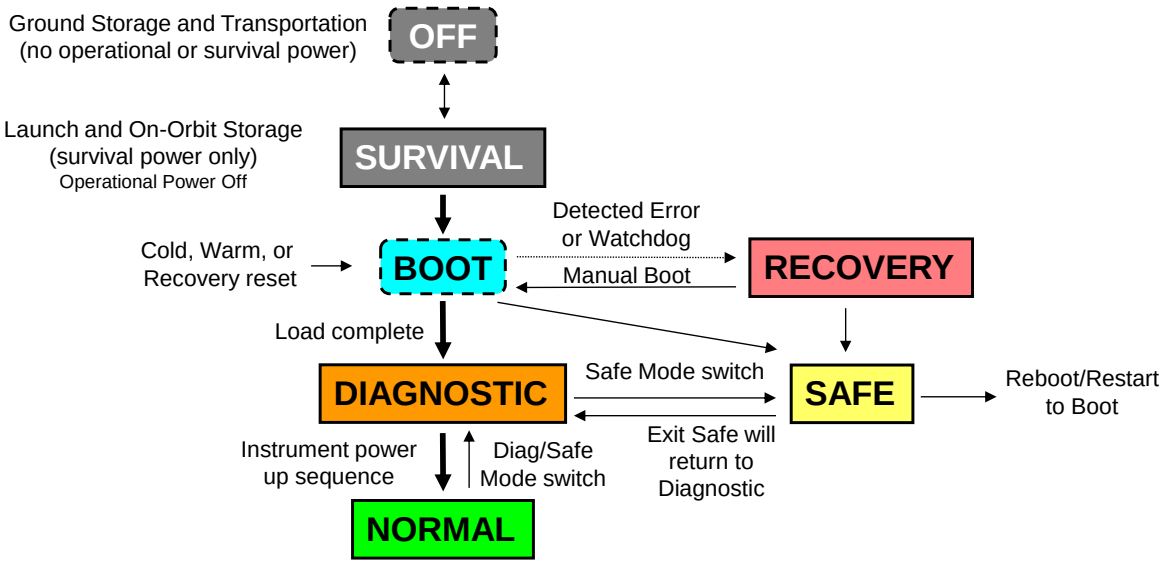

Figure 4-16. GLM States and Modes

While power may be removed at any time, a transition to safe mode is typically used to prepare the instrument to lose power and allows for a programmed and ordered shutdown of the electronics.

Ground Processing

GLM hardware is designed to detect events, including many events caused by various sources of noise, and sends all these events to the ground for further processing. These raw events are part of the Level 0 (L0) data stream. The processed data has two levels; L1b data consists of navigated, calibrated events, and L2 data consists of the L1b events, groups, and flashes (described later).

The first step in the processing is to remove the non-lightning events from the data stream. Flashes are then identified by reviewing the remaining events. The ground processing algorithms include many filters designed to remove events not caused by lightning, including radiation hits and glint from sun on the ocean. Most of the filters are based on previous work on the Lightning Imaging Sensor (LIS) that flew on NASA's Tropical Rainfall Measuring Mission (TRMM). The most important filter is the coherency filter. This filter relies on the fact that true lightning events are

coherent in time and space, whereas noise events are not. This is the filter that enables GLM to operate near its noise floor, sending many noise events to the ground and detecting fainter lightning events in the process. As viewed from space, any given lightning flash will generate several to several tens of optical pulses. Flashes can be up to several seconds long, and contain multiple optical pulses detected in the same pixel or adjacent pixels. A noise event will not have this coherent behavior. Although many noise events may be triggered over the course of several seconds, they are unlikely to occur in the same or adjacent pixels. The coherency filter calculates the probability that any given event is a noise event, based on the event intensity, the electronics noise, and the photon noise of the background. When another event occurs in this same pixel or an adjacent pixel, the filter calculates the probability that both of these events are noise events, based on the new event intensity, the instrument and photon noise, and the time elapsed between the two events. When two events have a sufficiently low probability of both being noise, the events are reported as lightning. This probability threshold is adjustable to allow more or less stringent filtering of the data as desired by the user community.

The next step in ground processing is to geo-locate the lightning events, by converting their position on the GLM focal plane (in units of pixels) into a navigated location on the cloud top (as a geodetic longitude and latitude). Navigation takes into account the satellite's position and attitude, the Earth's rotation, and must also compensate for small distortions arising from thermal, optical and even relativistic effects. For the purpose of geo-location, lightning is assumed to emanate from a "lightning ellipsoid," an imaginary surface several km above the ground at the typical altitude of cloud tops; this minimizes parallax errors at higher latitudes. The navigation process also tags each lightning event with its origination time, which is earlier than its satellite received time. As observed from GEO, the light travel time from the cloud top to the GLM focal plane is ~0.12 s, during which time GLM has already acquired another 60 image frames. Events are time-tagged to a precision of 1 millisecond.

The final step in L1b ground processing is to calibrate the events, a process that converts the intensity of each lightning event from raw units of detector counts to physical units of energy. The output from L1b data processing consists of all the events labeled as lightning by the ground filters, navigated in latitude and longitude, and calibrated in units of joules.

The L2 algorithms sort the L1b events into groups and flashes. Groups are sets of events that occur in the same frame and are contiguous on the focal plane. Groups are equivalent to the optical pulses generated by lightning at the top of clouds. Flashes are sets of groups that are associated with each other in time and space. The exact rules for which groups get associated together into flashes can be adjusted by parameters in the L2 algorithm, known as the Lightning Cluster-Filter Algorithm (LCFA).

The L2 data product from GLM is then used by downstream algorithms to convey information about lightning to end users. The latency from occurrence of the lightning to its reporting in L2 data (including propagation time to the satellite, processing by the instrument, downlink to the ground station, and data processing from L0 to L1b to L2) is required to be less than 20 seconds. This short latency is what enables "now-casting" of severe weather based on lightning flash rates tracked within individual storm cells.

5. Space Environment In-Situ Suite

The Space Environment In-Situ Suite, manufactured by Assurance Technology Corporation, measures the energetic charged particle environment in geosynchronous orbit, providing real-time data to the Space Weather Prediction Center (SWPC), one of NOAA's National Centers for Environmental Information (NCEI). SWPC receives, monitors, and interprets a wide variety of solar terrestrial data, and issues reports, forecasts, and alerts to the community for the "space weather" conditions.

SEISS comprises five individual sensors and a dual redundant data processing unit (DPU), as shown in Figure 5-1. The Magnetospheric Particle Sensor – Low Energy Range (MPS-LO) measures fluxes of ions and electrons in the 0.03 keV to 30 keV energy range in twelve angular zones. The Magnetospheric Particle Sensor – High Energy Range (MPS-HI) measures protons in the 0.08 MeV to 12 MeV energy range in five angular zones and electrons in the 0.05 MeV to 4 MeV energy range in five angular zones. Two identical Solar and Galactic Proton Sensors (SGPS) measure protons and alpha particles in the 1 MeV to >500 MeV energy range. One SGPS sensor faces east and the other faces west. The Energetic Heavy Ion Sensor (EHIS) measures ions in the 10 MeV/nucleon to 200 MeV/nucleon energy range for hydrogen and helium with single element resolution through nickel. The DPU provides the power, telemetry and command interface to the spacecraft. The DPU also synchronizes the data acquisition of the five SEISS sensors. Figure 5-2 shows the location of the sensors on the GOES-R series spacecraft, and Figure 5-3 shows the units themselves.

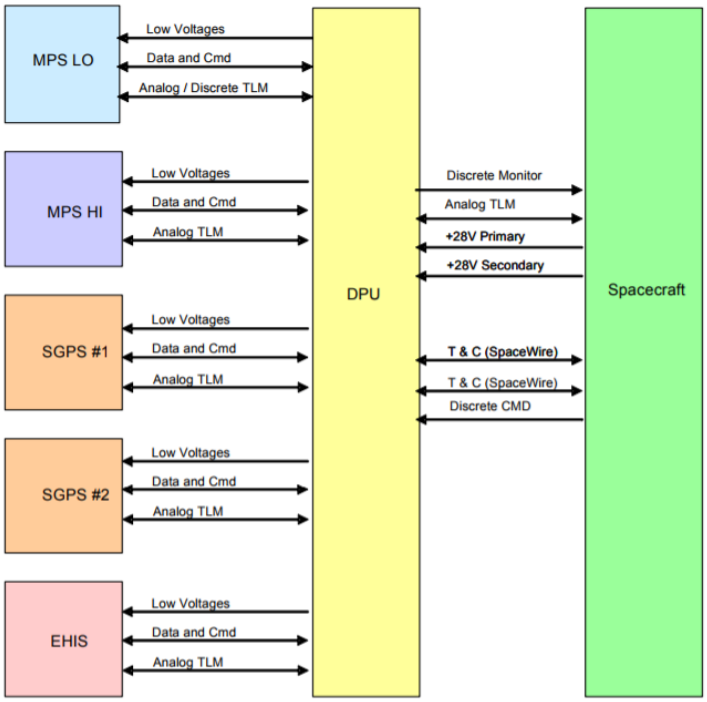

Figure 5-1. Block Diagram of the SEISS Suite

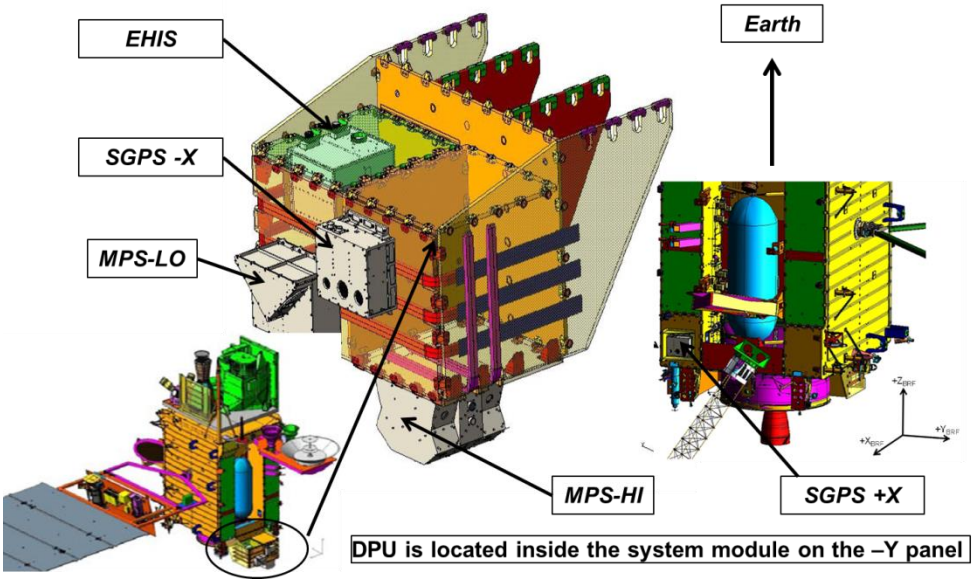

Figure 5-2. Location of the SEISS Sensors on the GOES-R Series Spacecraft

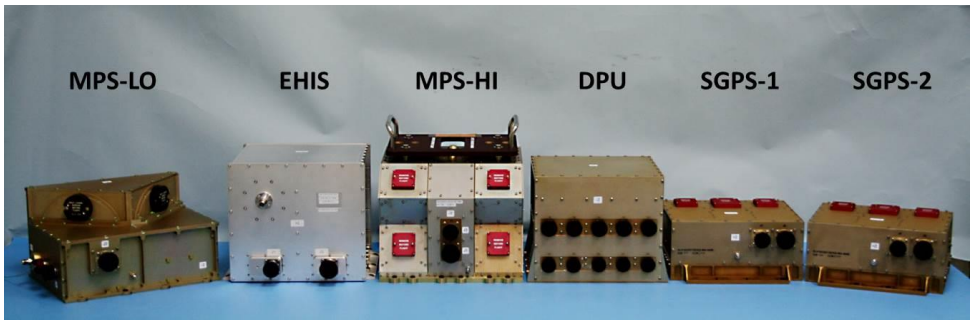

Figure 5-3. The Space Environment In-Situ Suite Sensors

The GOES-R series represents a significant leap forward in technology and capability for monitoring the energetic charged particle environment. The improvements in SEISS, over the heritage GOES-NOP Space Environment Monitor suite, support the latest NOAA space weather specification and prediction requirements. SEISS covers a wider range of particle types, energies and arrival directions than with the previous GOES instruments. Meeting the latest NOAA requirements necessitates addition of two new instruments not previously flown on GOES – the MPS-LO suprathermal plasma analyzer and the EHIS heavy ion cosmic ray detector. The new MPS-HI and SGPS medium and high energy electron and proton instruments have been designed to make accurate measurements over a much wider dynamic flux range than the previous GOES MAGPD (Magnetospheric Proton Detector), MAGED (Magnetosphere Electron Detector) and EPEAD (Electron, Proton, Alpha Detector) instruments. Figure 5-4 below compares graphically the measurement capabilities for protons and electrons of the SEISS sensors with the heritage GOES-NOP sensors.

The MPS-LO, MPS-HI and SGPS sensor units do not contain microprocessors and therefore have no software. However, they do contain firmware in the form of Field Programmable Gate Arrays (FPGAs). The EHIS does contain a Control Processing Unit (CPU).

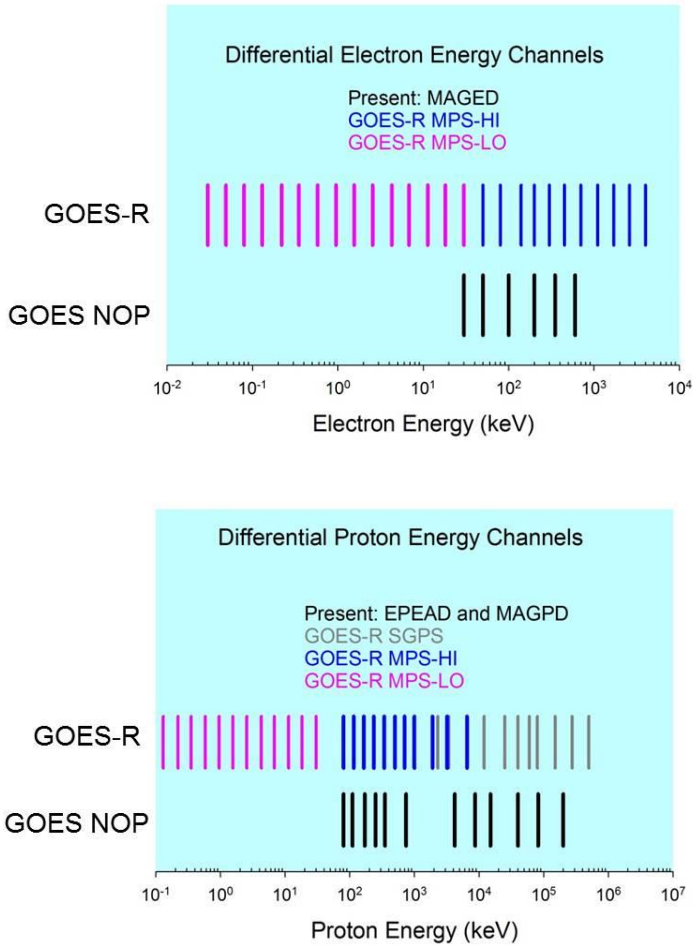

Figure 5-4. Graphical Comparison of the Proton and Electron Measurement Capabilities of the GOES-R SEISS Sensors and the Heritage GOES-NOP Sensors

DPU

The DPU provides the electrical interface to the spacecraft for the power, command, control and telemetry output. It controls the operation of the five SEISS sensor units and performs a power converter function to take the prime 28-volt (V) power from the spacecraft and output regulated voltages of ±15V and ±7.5V to each of the five sensor units. Two fully redundant power supplies provide power to the five SEISS sensor units.

A SpaceWire interface with fully redundant cross-strap capability is used to communicate command and telemetry data between the spacecraft and the active digital circuit card assembly in the DPU. DPU processing includes command and telemetry data handling, but no additional sensor unit data manipulation. The sensors each process their own data. The DPU communicates with the sensor units over an RS-422 synchronous serial interface. Fully redundant data buses are provided to the five sensor units. Figure 5-5 is a functional diagram for the DPU and shows the DPU interfaces with the sensor units.

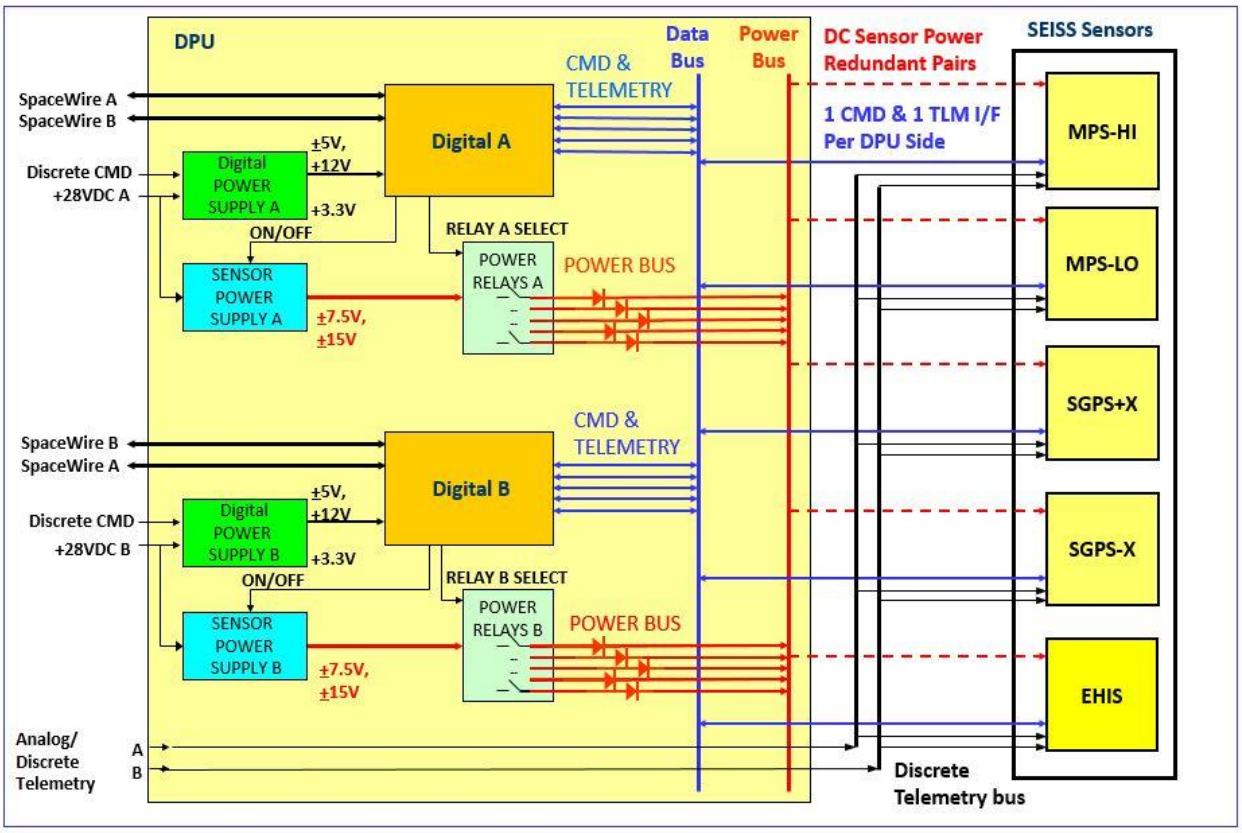

Figure 5-5. DPU Functional Block Diagram

MPS-LO Sensor

MPS-LO measures ions and electrons in the 0.03 keV to 30 keV energy range. The instrument measures and reports particle fluxes in 15 logarithmically-spaced energy channels and 12 unique angular zones. Table 5-1 lists the MPS-LO energy band centroids for ions and electrons. The energy band widths are 5.8% of the centroid energies. Figure 5-6 shows the configuration of the angular zones with respect to the instrument and the spacecraft pointing. Because electrons and protons at these energy levels generate very small signals, solid state detector (SSD) technology is not feasible for their measurement. Therefore, the MPS-LO sensor uses an electrostatic analyzer (ESA) and multipliers.

The ESA operates on the principle that a particle of a certain energy in a cylindrical or spherical electric field will travel in a specific circular path. An ESA uses a pair of deflection electrodes, with an electric field across the gap between the electrodes to guide charged particle trajectories. Particles with just the right energy pass between the electrodes without collision. Those with energy too high or low collide with the electrodes and are lost. The deflection electrodes operate as a narrow band energy filter.

The MPS-LO has four sets of deflection electrodes, two for electrons and two for ions. The four sets are mounted in two triquadrisphere assemblies. Each triquadrisphere provides a 120-degree field-of-view and the two triquadrispheres are mounted at right angles to each other to provide a

total 180-degree field-of-view. The twelve 15 deg angular zones will enable determination of pitch-angle distributions from the orbital data. Each triquadrisphere assembly contains both an outer set of electron deflection electrodes and an inner set of ion deflection electrodes. The bias voltage between the deflection electrodes is rapidly stepped to selectively filter particles from 0.03 keV to 30 keV. At a particular voltage step, only particles of a specific energy and charge will pass through the plates to reach the MCP detectors. A complete sweep of the energy range takes one second. Particles at the correct energy pass between the electrodes and are accelerated into an electron multiplier, an avalanche device referred to as the Microchannel Plate (MCP), which generates a signal large enough to measure or count. The 270 deg geometry of the MPS-LO deflection electrodes preserves the angle of incidence information of the incident particles and provides excellent energy resolution ($\Delta E/E = 0.058$). The 270 deg geometry, combined with the deflection electrode coating, also ensures that MPS-LO is solar blind. Another unique feature of the MPS-LO is the inclusion of detectors, shielded from the suprathermal plasma, that provide an independent measurement of backgrounds due to penetrating radiation. Those background measurements are utilized in the ground processing algorithms to correct the particle data during solar particle events and major geomagnetic storms.

The MPS-LO consists of two triquadrisphere assemblies, the MCP assemblies, sensing and counting electronics, and an RS-422 interface with the SEISS Data Processing Unit (DPU) implemented in firmware within a single Field Programmable Gate Array (FPGA).

MPS-LO represents new capability for space weather measurement on the GOES-R series spacecraft. MPS-LO data will reveal the level of charging by low energy electrons that the GOES-R spacecraft is undergoing. Spacecraft charging can cause electrostatic discharge (ESD) and arcing between two differently charged parts of the spacecraft. This discharge arc can cause serious and permanent damage to the hardware on board a spacecraft, which affects operation, navigation and interferes with measurements being taken. The data will also be used as inputs to develop and validate new models of the space radiation environment.

Table 5-1. MPS-LO Energy Band Centroids for Ions and Electrons. Note that energy band width is 5.8% of the centroid value.

Band	Energy Band Centroids (keV)	
	Ions	Electrons
E15	0.030	0.025
E14	0.049	0.040
E13	0.080	0.066
E12	0.130	0.115
E11	0.212	0.192
E10	0.346	0.316
E9	0.564	0.527
E8	0.926	0.888
E7	1.514	1.502
E6	2.490	2.439
E5	4.094	4.043
E4	6.588	6.732
E3	11.200	11.200
E2	18.590	18.590
E1	30.810	30.810

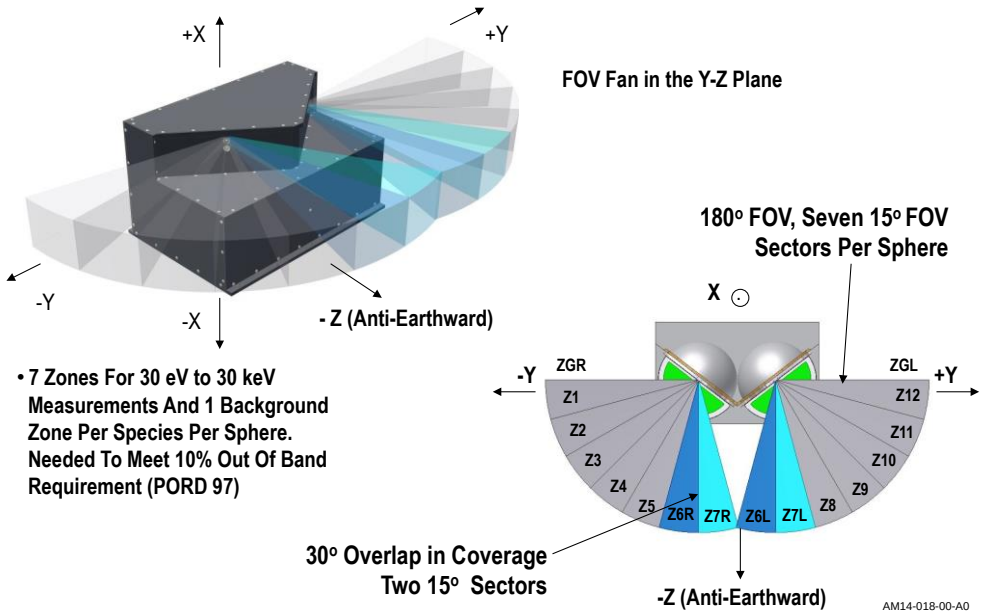

Figure 5-6. MPS-LO Field of View and Angular Zones. The –Z-axis points anti-earthward. The Y-axis points north-south.

MPS-HI Sensor

MPS-HI measures protons in the 0.08 MeV to 12 MeV energy range and electrons in the 0.05 MeV to 4 MeV energy range. The instrument records and reports proton fluxes in 10 logarithmically-spaced proton energy channels and 10 logarithmically-spaced electron energy channels with an additional >2 MeV integral channel for electrons. Table 5-2 and Table 5-3 list the energy bands for the MPS-HI proton and electron telescope channels. The instrument comprises 5 proton silicon solid state detector (SSD) telescopes and 5 electron telescopes. Each telescope has a 30 degree full-angle field of view and the telescopes are arranged to provide a 170 degree field of regard. Figure 5-7 shows the configuration of the telescope fields of view with respect to the instrument and the spacecraft pointing.

MPS-HI measurements are similar to measurements performed by the heritage GOES space weather instruments; however, MPS-HI provides greater energy range and greatly improved out-of-band rejection compared to previous sensors. The MPS-HI sensor monitors medium and high energy protons and electrons which can shorten the life of a satellite. High energy electrons are extremely damaging to spacecraft because they can penetrate and pass through objects which can cause dielectric breakdowns and result in discharge damage inside of equipment.

Each proton telescope comprises three ion-implanted SSDs, while each electron telescope comprises nine SSDs. In the electron telescopes, three of the SSDs form individual detector channels, while the remaining six detectors are connected into a single detector channel. The thicknesses and dimensions are selected to meet the energy range and field of view requirements for the system. The proton telescopes also include a magnet in the aperture to deflect low-energy electrons from reaching the first detector. Since in-general, the low energy electron flux exceeds the low-energy proton flux, sometimes by orders of magnitude, the magnetic deflection aids in the particle-type discrimination.

The MPS-HI also includes two dosimeter sensors for measuring the Linear Energy Transfer (LET) of energy particles behind two different shielding thicknesses. The dosimeter Field of View (FOV) is approximately 180 degrees.

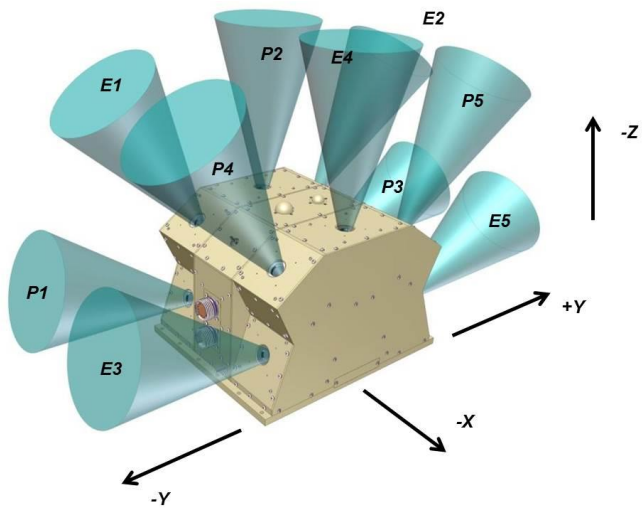

Figure 5-7. Fields of view of the 5 electron telescopes (E1-E5) and the 5 proton telescope (P1-P5) for MPS-HI. The –Z-axis points anti-earthward. The Y-axis points north-south.

Table 5-2. Energy Bands for the Five MPS-HI Proton Telescopes

Proton Channel	Energy Bands (keV)	
	Lower	Upper
P1	80	115
P2	115	165
P3	165	235
P4	235	340
P5	340	500
P6	500	700
P7	700	1,000
P8	1,000	1,900
P9	1,900	3,200
P10	3,200	6,500
P11	6,500	12,000

Table 5-3. Energy Bands for the Five MPS-HI Electron Telescopes

Channel	Energy Bands (keV) ETel 1, 2, 4		Energy Bands (keV) ETel 3, 5	
	Lower	Upper	Lower	Upper
E2	90	145	95	140
E3+E3A	145	230	140	275
E4	230	325	275	405
E5	325	460	405	609
E6	460	705	609	794
E7	705	1360	794	1364
E8	1360	1785	1364	1903
E9	1785	2685	1903	2842
E10	2685	4345	2842	4515
E10A	4345	5660	4515	5899
E11	2000		2000	

SGPS Sensors

The SGPS instruments measure protons in the 1 MeV to >500 MeV energy range. The two identical instruments measure and report the flux in 10 logarithmically-spaced energy channels and 1 integral channel for protons >500 MeV. The energy range is covered using three separate SSD telescopes. Telescope-1 measures 1 MeV to 25 MeV protons and has a 60 degree full-angle cone field of view. Telescope-1 comprises two SSDs. Telescope-2 measures 25 MeV to 80 MeV protons and also has a 60 degree full-angle conic field of view. Table 5-4 lists the energy bands for the two SGPS sensors. Telescope-2 comprises three SSDs and aluminum energy degraders. Telescope-3 measures 80 MeV to >500 MeV protons, has a 90 degree full-angle conic field of view and comprises three SSDs and copper energy degraders. The fields of view of each of the telescopes are co-aligned. The fields of view of one SGPS unit point east, the other points west. Figure 5-8 shows the SGPS configuration and fields of view.

SGPS measurements are similar to measurements performed by the heritage GOES space weather instruments; however, SGPS provides greater energy range and greatly improved out-of-band rejection compared to previous sensors. The data provided by SGPS will assist NOAA's NCEI in providing solar radiation storm warnings. These particular measurements are crucial to the health of astronauts on space missions, though passengers on certain airline routes may

experience increased radiation exposure as well. In addition, these protons can cause blackouts of radio communication near the Earth's poles and can disrupt commercial air transportation flying polar routes. The warning system allows airlines to reroute planes that would normally fly over Earth's poles.

A significant design challenge for SGPS is the differentiation of high-energy protons (>80 MeV) that enter a telescope from the front or the back. To facilitate that differentiation, we have included circuitry that compares the signals in the front-most SSD and the rear-most SSD. Protons entering from the front of the sensor, will deposit slightly less energy in SSD-1 than in SSD-3. For protons entering from the rear of the sensor, the opposite will be true. The design uses a precision comparator to compare the signal in SSD-1 and in SSD-3. The results of that comparison aid the on-board logic in differentiating front-entry from rear-entry particles.

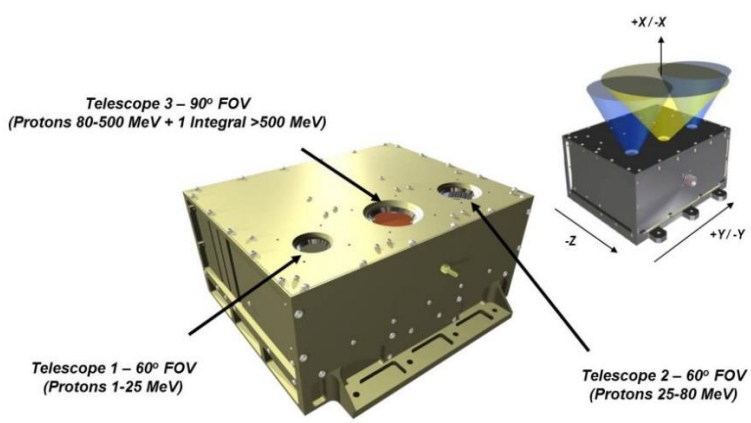

Figure 5-8. Fields of view of the three SGPS telescopes. The fields of view of the three telescopes are co-aligned and point east (SGPS-1) and west (SGPS-2).

Table 5-4. Energy Bands for SGPS+X and SGSP-X (50% points)

Channel	SGPS+X		SGPS-X	
	Low (MeV)	High (MeV)	Low (MeV)	High (MeV)
P1	1.02	1.86	1.02	1.86
P2A	1.90	2.30	1.90	2.30
P2B	2.31	3.34	2.31	3.34
P3	3.40	6.48	3.40	6.48
P4	5.84	11.0	5.84	11.0
P5	11.64	23.27	11.64	23.27
P6	25.9	39.1	24.9	38.1
P7	41.2	74.3	40.3	73.4
P8A	82.9	99.8	83.7	98.5
P8B	96.4	121	99.9	118
P8C	114	148	115	143
P9	160	242	160	242
P10	276	404	276	404
P11	540		540	

EHIS Sensor

The heavy ion measurements made by EHIS are a new capability for the GOES-R series space weather instruments. The EHIS is responsible for measuring heavy ion fluxes in the magnetosphere to provide a complete picture of the energetic particles surrounding Earth. This includes particles trapped within Earth's magnetosphere and particles arriving directly from the sun and cosmic rays which have been accelerated by electromagnetic fields in space. This information will be used to help scientists protect astronauts and high altitude aircraft from high levels of harmful ionizing radiation.

EHIS measures fluxes of ions from protons through nickel. The energy range of measurement is 10 – 200 MeV for protons. For heavier ions it is the energy range for which that ion penetrates the same amount of material, in areal density, as do the 10 – 200 MeV protons. The data are binned in five logarithmically spaced intervals in this energy range for five mass bands, Hydrogen, Helium, Carbon through Oxygen, Neon through Phosphorus, and Chlorine through Nickel. Table 5-5 lists the energy bands for representative ions that span the EHIS detection range. The counting rate over which the instrument functions ranges from the galactic cosmic ray rate of ~0.3 events/sec through the solar particle event rate of 30,000 events/sec.

EHIS contains a single SSD telescope with a 28 degree full-angle conic field of view. The telescope is pointed anti-earthward, with a pointing accuracy of 2 degrees. Figure 5-9 shows the EHIS sensor, its field of view, and a cross-sectional view of the telescope.

EHIS uses commonly accepted techniques and a unique trajectory system to achieve these goals. The technique EHIS employs is an energy loss (dE/dx) vs. residual energy (E) measurement taken with a stack of thirteen co-axially mounted SSDs. A plastic scintillator acts as a veto for side-entry particles.

Ions travel through detectors depositing energy in the silicon SSDs that is read out as a current pulse. Each SSD outputs a charge (current) pulse proportional to the energy deposited. The first three SSDs are used in the Angle Detecting Inclined Sensor (ADIS) system. Accurate incident particle angle information allows for the individual elemental separation. In order to identify heavy ions with good mass resolution on an event-by-event basis using a dE/dx vs. E method, it is necessary to account for the angle of incidence of the particle. Identical ions entering an instrument at different angles will deposit different amounts of energy in the various detectors. ADIS takes advantage of this effect with two detectors (D2 and D3) mounted at known angles with respect to the plane normal to the telescope axis. The polar angle is 30 deg for both D2 and D3 but the azimuthal angles are different. The energy deposition in these tilted detectors is compared to the energy deposition in the one mounted normal to the instrument axis. From the different energy deposited in these inclined detectors, the on-board processing determines the angle of incidence of each particle

With these angles and the measured energy deposits in the first six SSDs, EHIS uses an on-board processor to calculate the charge of a particle using the ZCAL method. The ZCAL method, developed originally at California Institute of Technology, is an approximation that enables the determination of the ion charge based on the energy deposited in the detectors. The on-board processor can analyze between 1,800 and 2,700 events/second. Results are stored in charge-energy histograms for telemetry to the ground on a 1-minute cadence.

Table 5-5. EHIS Energy Bands for Representative Ions.

EHIS reports abundances of all ions from H (Z=1) to Ga (Z=31)

		E1 (MeV/nucl)		E2 (MeV/nucl)		E3 (MeV/nucl)		E4 (MeV/nucl)		E5 (MeV/nucl)	
Atomic Number	**Element**	**Low**	**High**	**Low**	**High**	**Low**	**High**	**Low**	**High**	**Low**	**High**
1	**H**	13.00	31.50	31.00	44.50	43.50	56.25	54.00	92.25	109.50	179.75
2	**He**	10.00	31.75	31.00	43.75	44.00	52.75	54.50	91.75	110.00	194.00
6	**C**	18.50	59.50	57.00	82.25	81.50	98.75	101.00	171.75	210.00	335.25
7	**N**	19.75	65.00	61.25	89.75	87.25	107.75	108.50	184.75	229.00	367.00
8	**O**	22.00	70.75	67.00	97.00	96.50	117.00	119.00	200.00	249.50	400.75
12	**Mg**	26.25	87.00	82.75	118.00	118.25	143.00	147.00	247.50	312.25	493.75
14	**Si**	29.00	97.25	92.50	132.50	132.00	160.25	164.50	279.00	352.50	567.25
26	**Fe**	37.50	131.50	124.50	180.50	180.50	219.75	226.50	393.25	501.00	825.50

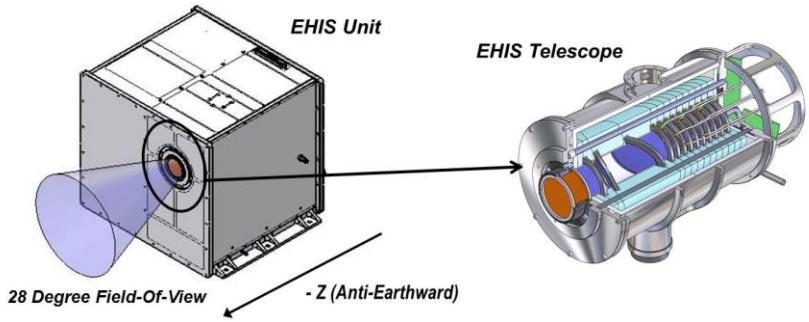

Figure 5-9. The EHIS sensor, 28 degree field of view and a cross-sectional view of the EHIS telescope showing the inclined detectors used in the Angle Detecting Inclined Sensor.

6. Magnetometer

The GOES-R series Magnetometer assembly (MAG) consists of two magnetometer instruments operating simultaneously to allow for gradiometry. The instruments are mounted on a deployable boom to keep them away from the spacecraft so as to minimize the spacecraft influence on instrument measurements. The MAG assembly is provided by ATK, while the individual magnetometer sensors are provided by Macintyre Electronic Design Associates, Inc (MEDA). Each Magnetometer instrument consists of a three-axis sensor and an electronics unit. Each magnetometer instrument measures three orthogonal vector components of the magnetic field in the vicinity of the spacecraft. The three Magnetometer axes are orthogonal to within +0.5 degrees and calibrated to within less than 0.1 degrees. Each sensor has a linear range of +512 nanoTesla (nT). This includes a measurement resolution of 0.016 nT and measurement bandwidth 2.5 Hz. The determination of the ambient magnetic field within the vicinity of the spacecraft is simultaneous and continuous.

The MAG supports the following mission objectives:

- Map the space environment that controls charged particle dynamics in the outer region of the magnetosphere
- Measure the magnitude and direction of the Earth's ambient magnetic field in three orthogonal directions in the geosynchronous equatorial orbit
- Determine general level of geomagnetic activity
- Detect magnetopause crossings, storm sudden commencements, and sub-storms

The MAG measures and maps the space environment magnetic field that controls charged particle dynamics in the outer region of the magnetosphere. These particular particles can be dangerous to spacecraft and astronauts. These geomagnetic field readings are important for providing alerts and warnings to many customers including satellite operators and power utilities. The MAG also determines the level of geomagnetic activity as well as detects magnetopause crossings and storm sudden commencements.

The GOES-R series MAG provides vital information to both the satellite itself, as well as to the individuals monitoring space weather patterns on the ground. This system serves as an early warning system for large scale magnetic storms. These measurements are used to validate large scale space models that are used in operation. Figure 6-1 and 6-2 show notional depictions of the MAG instrument. The two magnetometers are mounted on a deployable boom as shown with supporting electronics mounted onboard the spacecraft. These components are thermally controlled to maintain operational temperatures.

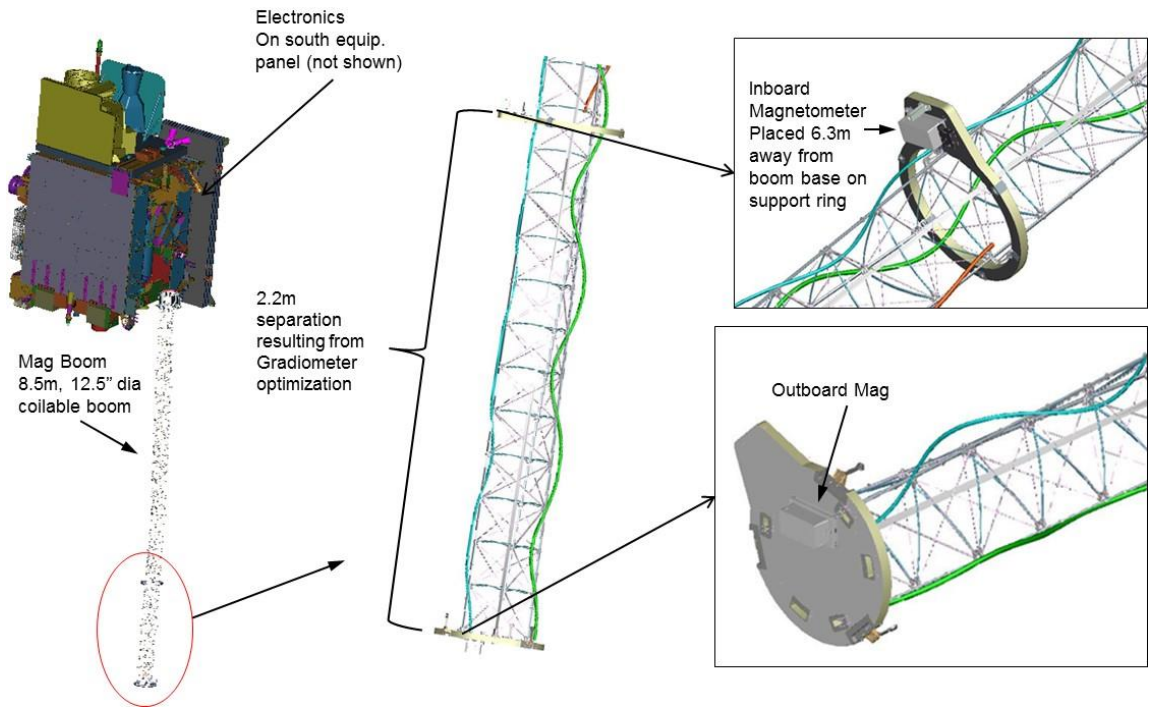

Figure 6-1. Magnetometer Instrument Locations

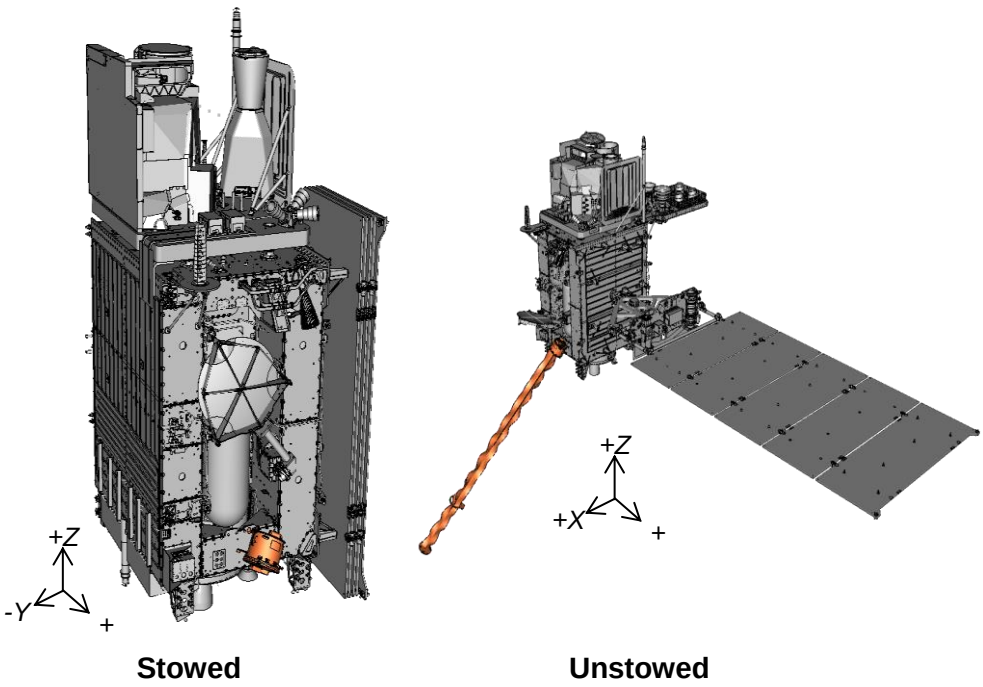

Figure 6-2. Magnetometer Stowed/Unstowed Configuration

The data from the MAG is used for the estimation of the Earth's magnetic field. A gradiometric algorithm is used in this estimation, in conjunction with a priori knowledge of the satellite magnetic characteristics to accurately estimate the ambient magnetic field.

The two three-axis magnetometers utilize a gradiometer effect, allowing for continuous monitoring of the spacecraft magnetic field. The gradiometer uses a mathematical model to represent the spacecraft's field characteristics as a single dipole. The inboard magnetometer is deployed 6.35 meters from the spacecraft on the boom, and the outboard magnetometer is deployed 8.56 meters away from the spacecraft. These large distances from the spacecraft significantly reduce magnetic effects from the spacecraft's body. The boom employs a light-weight, composite, coiled design to permit compact stowage. Its release mechanism consists of a frangibolt with an actuated release pin. The sensors themselves are fully blanketed with thermal blankets to protect them from the thermal environment.

As can be seen in Figure 6-3, the electronics for the magnetometer assembly are located on the spacecraft on the +Y panel. As shown in the block diagram in Figure 6-4, the sensor data passes through a Remote Interface Unit (RIU) to the Command and Data Handling (C&DH) subsystem. The flight software (FSW) passes the 10Hz magnetometer data to the ground, and the ground processing algorithms take each magnetometer measurement and generate an estimate of the ambient field based on the gradiometer algorithm, calibration data, and transient compensation. Mission operations maintains system performance parameters via periodic in-flight calibrations. The In-situ calibration takes into account the characterization of the spacecraft static magnetic field at the magnetometer sensors, the characterization of the spacecraft AC magnetic field at the sensors, and the characterization of the magnetic sensor alignment with respect to the attitude reference frame.

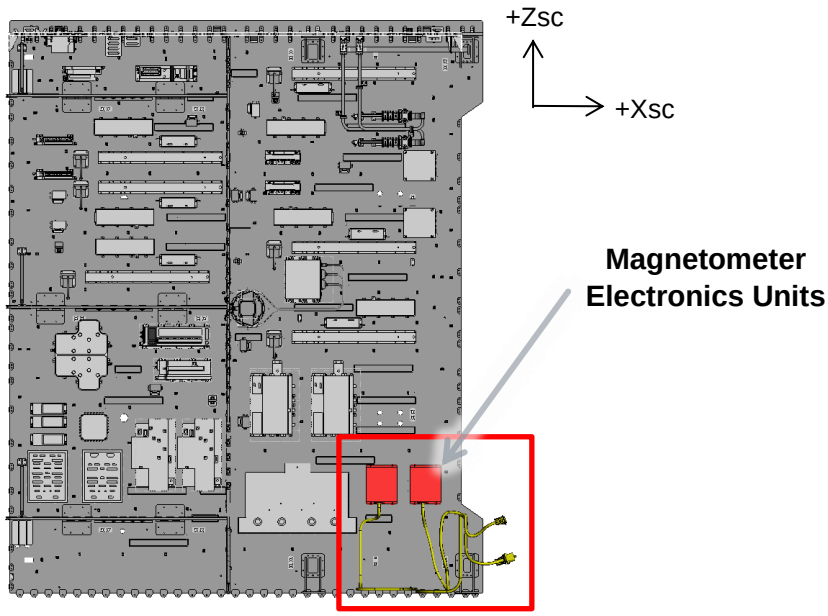

Figure 6-3. Location of Magnetometer Electronics Units

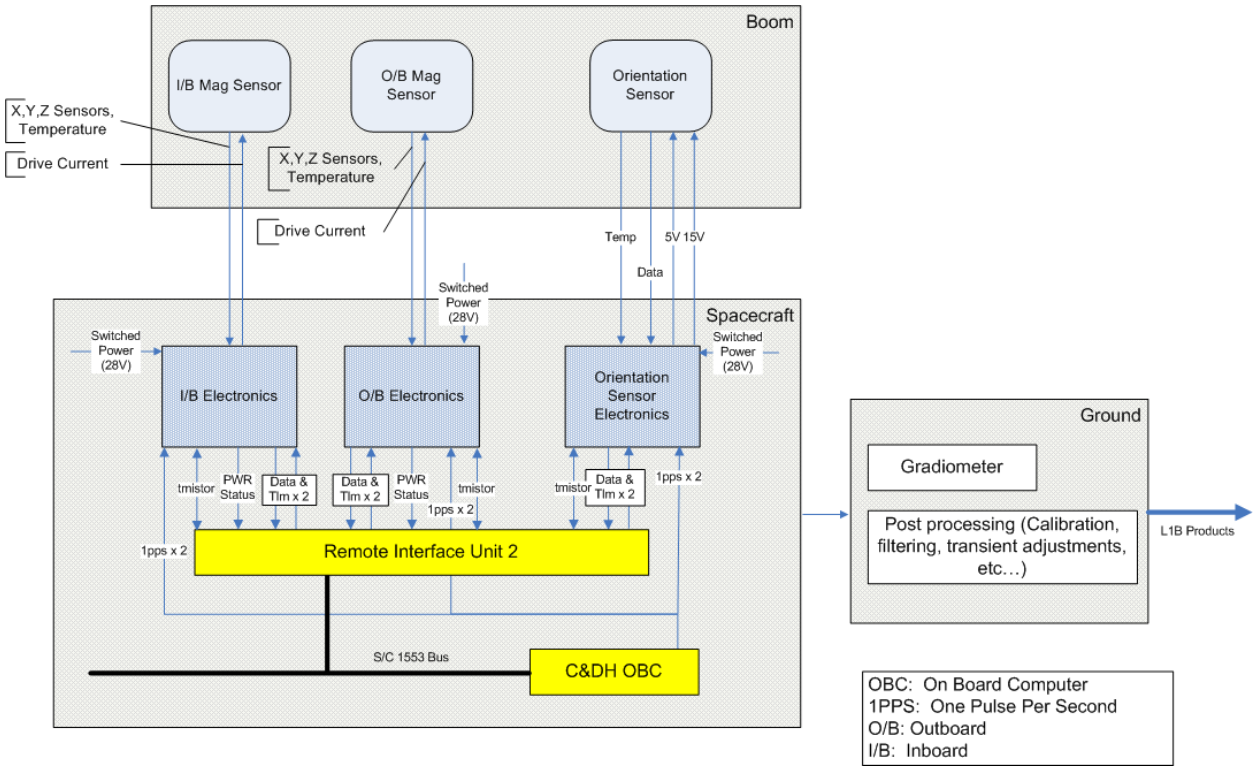

Figure 6-4. Magnetometer Block Diagram

The MAG has four modes of operation. Normal mode provides 3-axis science data at 10Hz, time stamps and status data. Maintenance Mode is used to support ground calibration and testing along with supporting upload/download of calibration coefficients and firmware images. Health Test Mode executes a set of step commands and reports telemetry exactly as it does in normal mode. This generates a predefined magnetic field step sequence to confirm the health of the unit. The last mode is Safe Mode, which is Off Mode.

7. The Extreme Ultraviolet and X-ray Irradiance Sensors Instrument

Space Weather Monitoring: The Sun/Earth Weather Connection

Measuring solar radiation variability is an important component of space weather monitoring as huge eruptions of energy on the sun, in the form of solar flares and associated coronal mass ejections, can have severe impacts on the Earth's atmosphere and human endeavors. This solar radiation variability drives the heating, ionization, chemistry and dynamics in the Earth's atmosphere which in turn can create hazards for astronauts in the form of an increased exposure to radiation and for orbiting satellites where atmospheric density changes can affect orbit integrity and tracking. Earth terrestrial level affects can include communications blackouts, disruptions to power grids and errors in Global Positioning System (GPS) navigation. The GOES program at its inception in 1975 had a terrestrial focus that looked to provide continuous Earth imaging and sounding data. Monitoring solar irradiance in the soft X-rays was part of the GOES program starting in 1986, and on the NOAA SMS series prior to that, leading to the use of the soft X-rays measurements for the classification of flare magnitude. Starting with the GOES-N satellite series in 2001, capability was added to monitor and study effects of solar dynamics by providing solar imaging and extreme ultraviolet irradiance measurements.

The GOES-R satellite series development of the EXIS instrument by the University of Colorado's Laboratory for Atmospheric and Space Physics (LASP) continues these important space weather measurements. EXIS focuses on measuring the brightness of the sun at several different wavelengths of light that have been shown to affect the Earth's atmosphere and terrestrial environment. A detailed instrument description follows.

The Extreme Ultraviolet and X-ray Irradiance Sensors instrument resides on the Sun Pointing Platform (SPP) which is mounted to the yoke of the spacecraft solar array. EXIS instrument channels continuously measure the absolute brightness of the full disk of the sun looking for changes that provide an early warning of an impending solar storm. On a quarterly basis, for a short period of time, the SPP performs a 16° off-point in order to monitor any changes in instrument performance by comparing to mission start baseline dark signals and performing electronic calibrations of the instrument detector systems. Figure 7-1 below shows how EXIS integrates into the SPP and how the SPP is integrated onto the spacecraft. Key physical parameters for the EXIS are shown in Table 7-1.

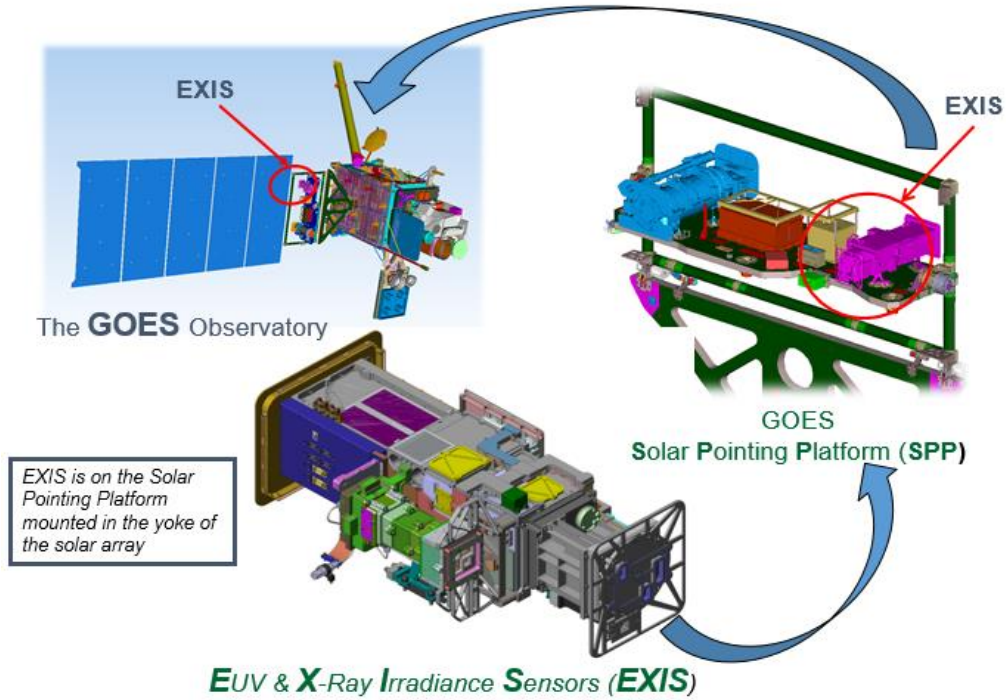

Figure 7-1. EXIS Integrated into the SPP and the SPP Integrated onto the Spacecraft

Table 7-1. EXIS Physical Resource Summary (GOES-R EXIS FM1)

	Units	Allocation (Ave/Peak)	Measured Values (Ave/Peak)	Margin
Total Mass	Kg	32.0	28.7	11.5%
Operational Power	Watts	53.0/65.0	31.4/61.7	68.8/5.4%
Survive Power	Watts	30.0/43.5	28.0/32.0	7.1/35.9%
Current	Amps	na/3.0	1.1/2.1	na/42.6%
Science Data Volume	Kbps	50.0	9.7	415.5%
HK Data volume	Kbps	1.0	0.9	12%
Physical Volume				
X axis	cm	76.0	75.9	0.1%
Y axis	cm	30.0	29.9	0.3%
Z axis	cm	37.0	37.0	0.0%

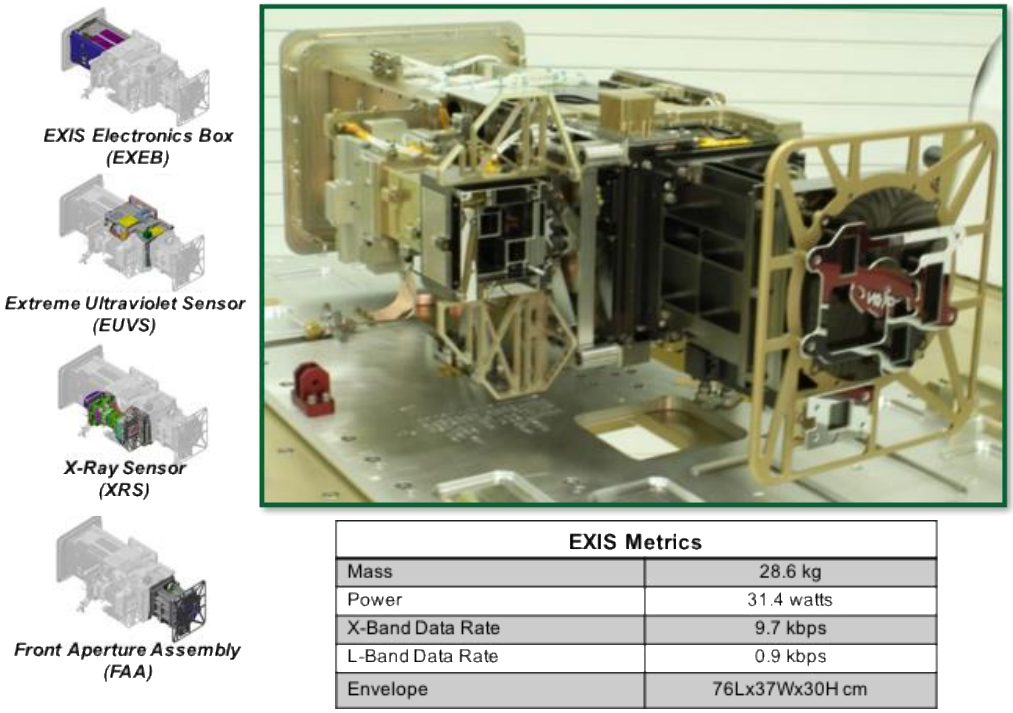

EXIS Metrics	
Mass	28.6 kg
Power	31.4 watts
X-Band Data Rate	9.7 kbps
L-Band Data Rate	0.9 kbps
Envelope	76Lx37Wx30H cm

Figure 7-2. Overview of EXIS Subassemblies and Key Metrics

EXIS is divided into four subassemblies as depicted in Figure 7-2: an X-ray Sensor (XRS), an Extreme Ultraviolet Sensor (EUVS), an EXIS Electrical Box (EXEB) and a Front Aperture Assembly (FAA) which includes a door mechanism, a filter mechanism, and a Solar Position Sensor (SPS). Attending flight software facilitates all intra-instrument communication and external communication with the spacecraft. A block diagram of the EXIS is shown in Figure 7-3, with each subassembly described in the following paragraphs.

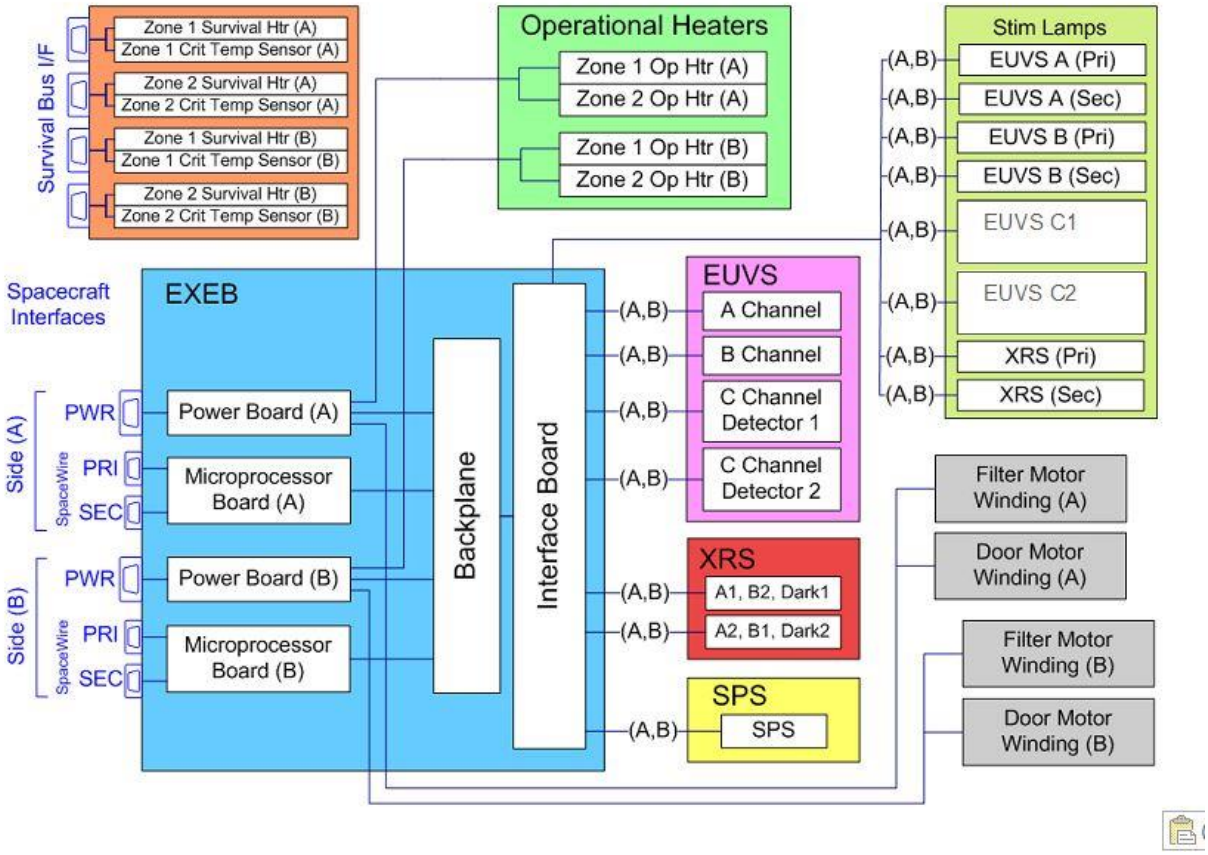

NOTES:

- Letters in parentheses, such as (A), refer to an operational side.

- The symbol (A, B) indicates device is accessible by both instrument side A and B.

- A capital letter not in parentheses refers to an optical channel.

Figure 7-3. EXIS Block Diagram

XRS

Consists of six photometers, four of which look at the sun and use filters to measure the X-ray bands of interest. Two photometers are covered and provide “dark” photometer background information for subtraction from the prime viewing channels. Channel A (A1/A2) covers 0.05-0.4 nm and channel B (B1/B2) covers 0.1-0.8 nm. All active channels view the sun through two beryllium (Be) filters with the thickness of the filters determining the bandpass. Each active XRS channel consists of a low-sensitivity (A2/B2) and a high-sensitivity (A1/B1) detector whose responses overlap in order to span the required total dynamic range. The low-sensitivity detectors are quadrant photodiodes, which view the sun through a small aperture, allowing X and Y position information to be extracted for bright, impulsive events such as solar flares. The high-sensitivity detectors are single element photodiodes with larger apertures. The aperture assembly of the

XRS incorporates an in-house designed electron deflection system (Ramatron) that deflects incoming electrons from the XRS detectors so only X-rays are measured. The Ramatron also provides magnetic shielding to the outside environment to minimize a magnetic signature that might affect other satellite measuring systems.

EUVS

Consists of three spectrographs which measure sunlight in select wavelengths of interest. The three spectrographs, denoted A, B and C, give coverage in the bands of 25-32 nm (0.6nm resolution), 115-141 nm (0.6nm resolution) and 275-285nm (0.1nm resolution) respectively. From these, a reconstruction of the full solar spectrum between 5 nm and 127 nm is generated. The three spectrographs use gratings, filters and solid state detectors to make the measurements in their respective wavelength bands. Post-dispersion photon detection is done via custom arrays of discrete silicon photodiodes for the A and B spectrographs, and a linear 512-element photodiode array for the C spectrograph which is made up of two redundant units, C1 and C2. The A spectrograph makes measurements in the Extreme Ultraviolet (EUV), the B spectrograph in the Far Ultraviolet (FUV), and the C in the Middle Ultraviolet (MUV) portions of the spectrum. The C channel also provides a calibration standard for the A and B spectrographs.

EXEB

Contains the instrument low voltage power supplies and a FPGA with imbedded microprocessor and instrument internal/external interfaces that facilitate housekeeping data collection from voltage, current and thermal monitors, instrument science data collection from XRS-A/B, EUVS A/B, EUVS C1/C2 and SPS, control of door motor, filter wheel motor, stimulus lamps, instrument calibration, and operational heaters. All communication to the spacecraft is via redundant SpaceWire links using the GOES-R Reliable Data Delivery Protocol (GRDDP).

FAA and SPS

Are made up of a door mechanism, a filter mechanism, a baffle assembly and a solar position sensor as shown in Figure 7-4. There are two mechanisms on EXIS, one being the EUVS filter mechanism which is used for selecting from redundant filters for EUVS A measurements, and the second one being the EUVS door mechanism whose purpose is to limit the rate that contamination can enter the EUVS optical apertures before going into on-orbit operations (not a hermetic seal). Both mechanisms consist of an aluminum disk directly connected to the output shaft of a stepper motor assembly. Each disk is mounted perpendicular to the axis of rotation of its shaft. The door disk has open and closed aperture positions that are placed at the locations needed for them to either block or open the lines of sight to the associated spectrograph. Although the door mechanism has the capability to open/close as desired, the on orbit intent is to open and leave open for the mission duration. The filter disk is made up of 24 redundant filters that can be cycled as needed to support the normal solar measurements and additionally to provide degradation checks of filters that sustain heavy usage.

The Solar Position Sensor is made up of a quadrant photodiode, aperture and control electronics whose purpose is to accurately and at high cadence report the position of the solar disk within the instrument field of view.

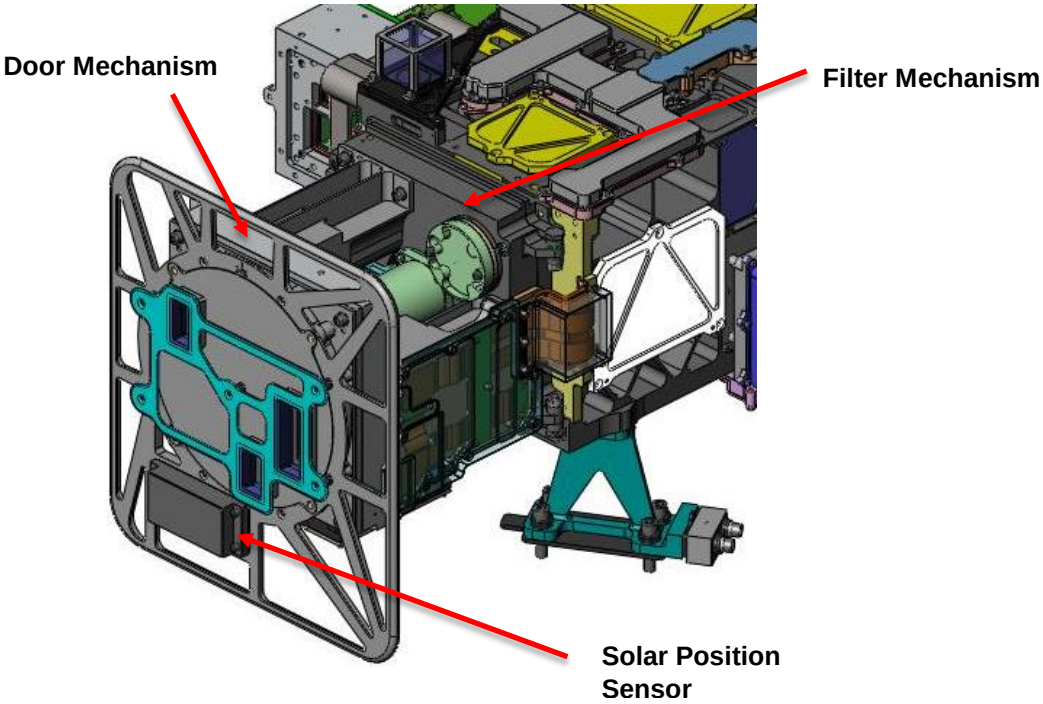

Figure 7-4. The Front Aperture Assembly (FAA) which includes a door mechanism, a filter mechanism, and a Solar Position Sensor (SPS).

Flight Software

Consists of start-up code stored in programmable read-only memory (PROM) and a reconfigurable/uploadable code stored in EEPROM that executes from RAM. This excludes all FPGA instruction sets.

Thermal

EXIS has two thermal zones, simply referred to as Zones 1 and 2 (see Figure 7-5). EXIS thermal Zone 2 consists of the EUVS C-channel detector package and radiator. Zone 1 is the remainder of the instrument. Each zone has its own redundant set of both operational and survival heaters. Operational heaters are controlled internally by a linear proportional control system located on the operational power boards. Survival heaters receive +70V power from the spacecraft and are switched by thermostatic switches located in each thermal zone.

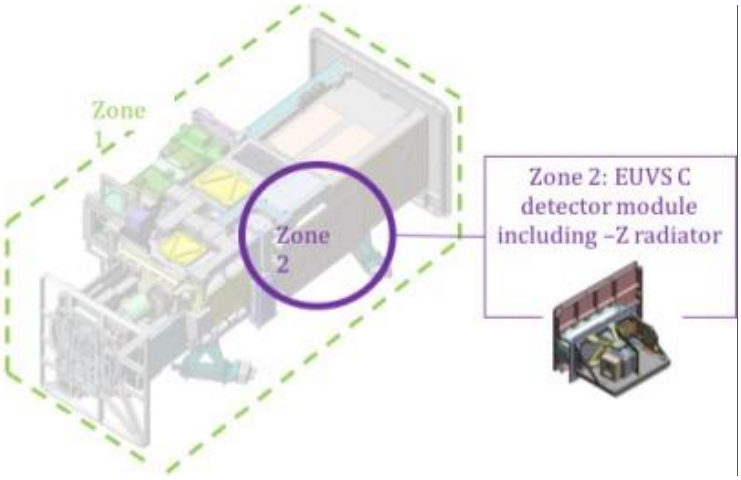

Thermal Zone	Operational Range	Survival Range
Zone 1	-5° C to +20° C	-35° C to +50° C
Zone 2	-15° C to 0° C	-30° C to +50° C

Figure 7-5. EXIS Thermal Zones

This page left blank

8. Solar Ultraviolet Imager

The Solar Ultraviolet Imager, manufactured by Lockheed Martin, is used to determine when to issue forecasts and alerts of “space weather” conditions that may interfere with ground and space systems. These conditions include ionospheric changes that affect radio communication (both ground-to-ground and satellite-to-ground) and magnetospheric variations that induce currents in electric power grids and long distance pipelines. These conditions can cause navigational errors in magnetic guidance systems, introduce changes in spacecraft charging, produce high energy particles that can cause single event upsets in satellite circuitry, and expose astronauts to increased radiation. SUVI is designed to provide a view of the solar corona by taking full-disk solar images at high cadence around the clock, except for brief periods during eclipse or instrument calibration, in the extreme ultraviolet (EUV) wavelength range. Available combinations of exposures and filters allow coverage of a range of solar features, including coronal holes, X-class flares, and estimates of temperature and emission measurements. Images from SUVI will be used by NOAA and U.S. Air Force forecasters to monitor solar conditions that affect space weather conditions, including the dynamic environment of energetic particles, solar wind streams, and coronal mass ejections emanating from the sun. These data can be used to issue forecasts of solar phenomena.

SUVI is tailored specifically to observe solar phenomena from a geosynchronous orbit located at either 75° or 137° west longitude. SUVI’s primary science objectives include:

- Locating coronal holes for the prediction of high-speed solar wind streams causing recurrent geomagnetic storms. These weakly emitting features are good predictors of geomagnetic storms for the years near solar activity minimum when long-lived holes are present on the sun.

- Locating the position of solar flares, both on the disk and beyond the west limb, to predict the magnitude of particle events.

- Identifying solar activity rotating onto the disk from the east limb. Enhanced emission above the limb provides information about solar activity occulted by the solar disk at other wavelengths.

- Monitoring the sun for evidence of coronal mass ejection (CME), which is associated with geomagnetic storms. Reliable indicators of the CME occurrence include separating flare ribbons, post flare loops between them (in long duration events), and large scale coronal dimming.

- Observing the size, temperature, morphology, and complexity of solar active regions. Changes in these properties will be used to predict the rate of growth of solar active regions and the probability that the regions may flare.

To meet these objectives, the SUVI images the solar corona in the EUV region of the electromagnetic spectrum. Full-disk solar images are provided with a 1280 X 1280 array with 2.5 arc-second pixels in six wavelength bands from 94 to 304 Å (9.4 to 30.4 nm). The SUVI optical

system employs a Ritchey-Chretien telescope consisting of multilayer coated optics, and a CCD detector at its focus to record images of the solar disk and its atmosphere. Using an aperture selector, SUVI operates at any one of the six EUV narrow spectral passbands via combination of thin film filters and multilayer coated optics. Each optic (mirror) of the telescope has six distinct multilayer coatings that are fine-tuned to reflect at a well-defined EUV wavelength that corresponds to a particular temperature region of the observed solar atmosphere, as shown in Figure 8-1. A regular sequence of exposures that are downlinked at ten-second intervals is used to cover the full dynamic range needed to monitor solar activity. Figure 8-2 presents a sample set of images of the sun in the six chosen wavelengths, bandpasses, representing a discrete range of plasma temperatures of the sun's atmosphere, from 0.3 to 3 million Kelvin. Hotter temperatures greater than 3 million K are reached during transient events such as flares and coronal mass ejections.

Wavelength	94Å	131Å	171Å	195Å	284Å	304Å
Primary Ion(s) observed by SUVI	Fe XVIII	Fe VIII	Fe IX	Fe XII	Fe XV	He II
Filaments						■
Coronal Holes					■	
Active Region Complexity		▒	■	■		
Coronal Mass Ejections (e.g. dimming)			■	■		
Flare Location and Morphology	■	■				
Quiet Regions		▒	■	■		■

Figure 8-1. The SUVI EUV Wavelength Bands used to observe the Range of Solar Phenomena important for Space Weather Forecasting.

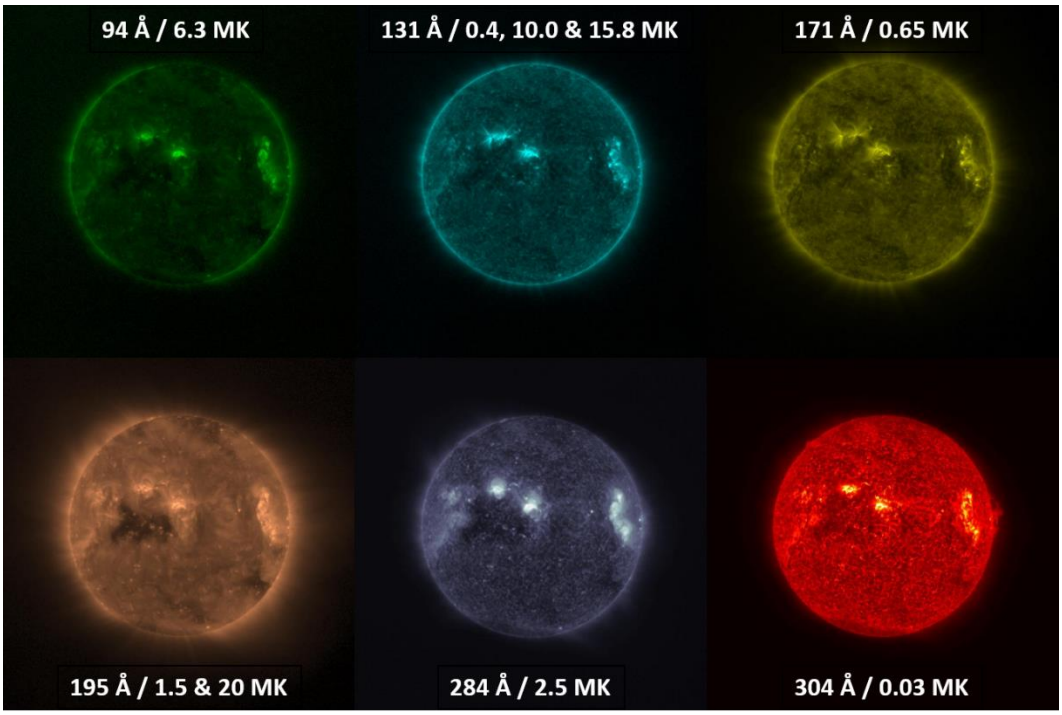

Figure 8-2. 60-minute averages of 1-second exposures, taken on January 23, 2017 of all six of SUVI's EUV passbands

The SUVI instrument consists of a telescope assembly, an electronic box, and the cables that run between the telescope assembly and the electronics box, as shown in Figure 8-3. The top level block diagram is presented in Figure 8-4. All SUVI components are mounted on the SPP as shown in Figure 8-5. The SUVI Electronics Box (SEB) provides the instrument control, data management, conditioned power to the rest of the instrument, and the spacecraft interface. The SUVI Telescope Subsystem (STS) consists of the EUV Telescope Assembly (ETA), the Guide Telescope Assembly (GTA), and the Camera Electronics Box (CEB). The GTA includes the Guide Telescope (GT) and the GT Pre-Amp box. The GTA is mounted on the ETA along with the CEB. The CEB provides CCD sensor control and image processing management. The GTA provides solar pointing data with respect to the instrument line-of-sight to the spacecraft during normal operation. A summary of SUVI's characteristics is given in Table 8-1.

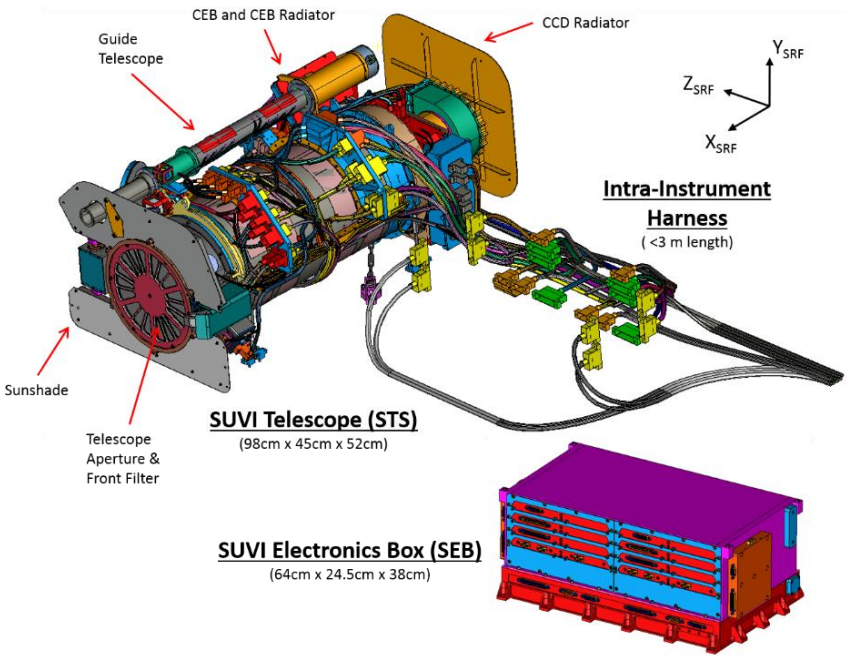

Figure 8-3. The SUVI Instrument

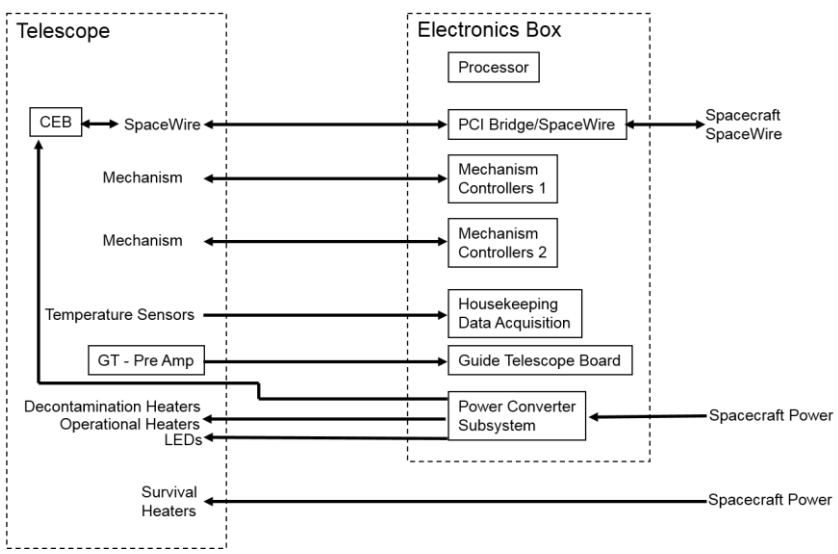

Figure 8-4. The SUVI Instrument Top Level Block Diagram

Table 8-1. Solar Ultraviolet Imager Characteristics

Mirrors	Multi-layer-coated Zerodur
Number of coating segments per mirror	6
Primary diameter	20 cm
Effective focal length	173.04 cm
Field of view	45 × 45 arcmin or better
Pixel size/Resolution	21 µm/2.5 arcsec
CCD detector	1280 × 1280 pixels
Detector full well	450 000 electrons
Full image frame rate	1 per 10 seconds
Typical exposure times	0.01 to 1 second
Flight computer	BAe RAD750
Mass:	
Telescope subsystem	39 kg
Electronics box	25 kg
Intra-instrument harness	8 kg
Instrument Power	225 W (peak)
Science telemetry	
Interface to spacecraft	3.5 Mbps
Design life	10 years (after 2 years of on-orbit storage)

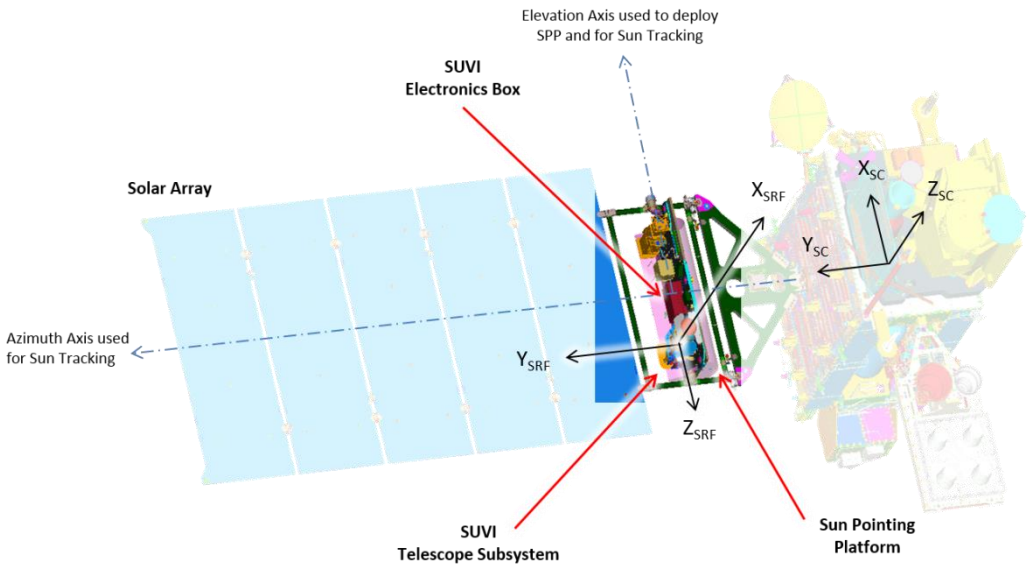

Figure 8-5. Solar Ultraviolet Imager and Solar Array in Deployed Configuration

Instrument System

SUVI is mounted on the SPP and co-aligned with the EXIS. The SPP assembly is mounted on the solar array yoke to continuously face the sun. The SPP is actuated using the SPP Elevation Gimbal Assembly (SEGA) in the north-south direction, tracking the sun in solar declination. The Solar Array Drive Assembly (SADA) controls the east-west pointing of the yoke, tracking the diurnal motion of the sun. Both the SPP N-S pointing and the yoke E-W pointing are controlled during normal operations by spacecraft-provided closed-loop control systems that utilize two-axis position error data from the SUVI Guide Telescope (GT).

The spacecraft-provided Sensor Interface Unit (SIU) (interchangeably called the Sun Pointing Platform Interface Unit) and Fine Sun Sensor (FSS) are also mounted on the SPP, as shown in Figure 8-6. The SIU is located between SUVI and EXIS and provides the command and telemetry SpaceWire interface between the instruments and the spacecraft. The FSS provides two-axis position error data when SUVI GT data is unavailable.

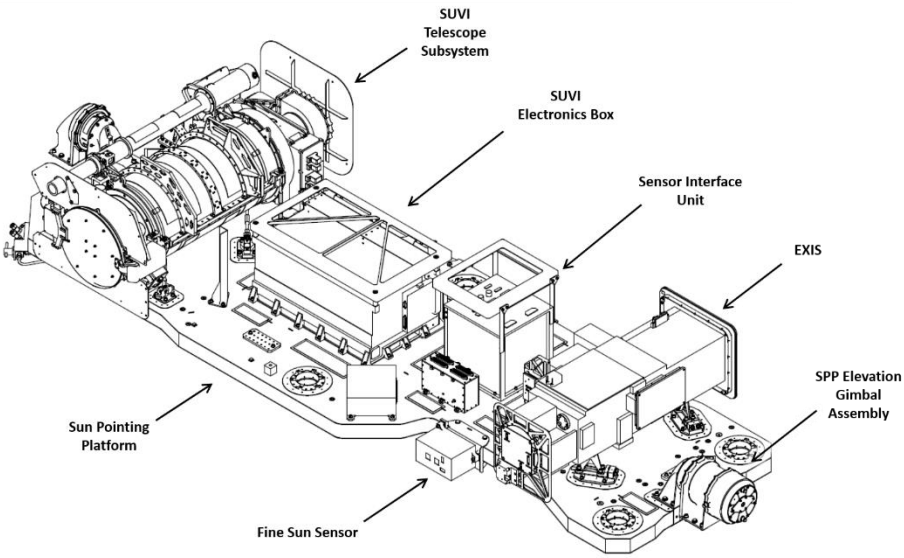

Figure 8-6. SUVI and EXIS Mounted on the SPP (harness and blankets not shown)

The total mass of the SUVI (telescope, electronics, harness) is 72.0 kg, of which 39 kg is the telescope assembly. Electrical connections to the GOES spacecraft cross the SADA interface through slip rings. Sixteen power rings have been allocated to SUVI. All SUVI spacecraft data interfaces are carried via SpaceWire to the GOES spacecraft, and sixteen signal rings have been allocated to SpaceWire. The SpaceWire network is capable of handling a SUVI data rate of 10 Mbps. EUV image data are transmitted from the Spacecraft at a rate of approximately 6 images per minute via the high-rate spacecraft Raw Data Link (RDL). SUVI health and safety data is also transmitted from the spacecraft as part of a separate low-rate observatory health data link.

Operation

Operation of SUVI is controlled through the SEB. The SEB primarily consists of three parts: power distribution, control processing, and data handling or storage. Control is performed via a RAD750 microprocessor. The SEB receives, interprets, validates, and executes both stored sequence commands and immediate execution commands. Through these commands, the SEB coordinates and controls the activities and operations of the SUVI instrument. In addition, the SEB receives, collects, and multiplexes the science, engineering, and housekeeping data from the SUVI components and provides the data stream to the spacecraft communication subsystem for transmission to ground facilities. SUVI transmits this data as SpaceWire data packets formatted per the GRDDP. Figure 8-7 gives a functional flow definition for the SEB command and data handling. The SEB electronics block diagram is presented in Figure 8-8.

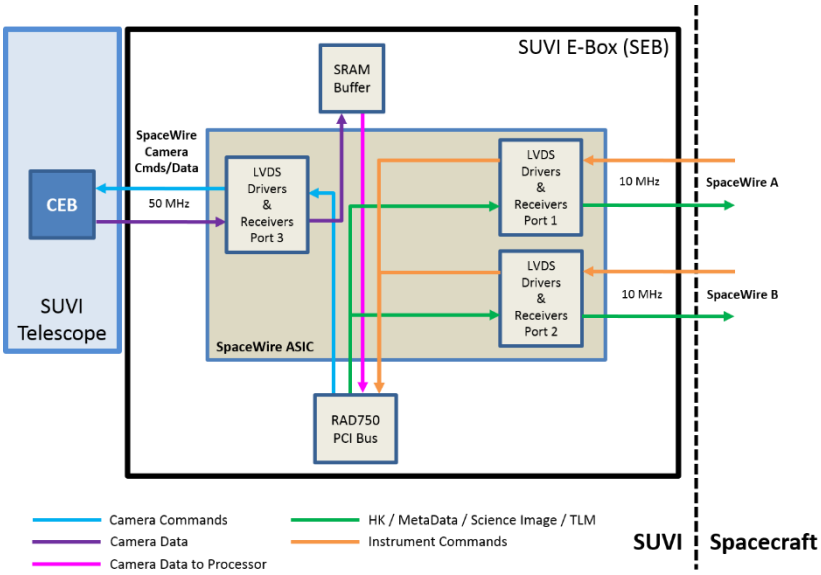

Figure 8-7. The SEB Command/Data Flow Block Diagram

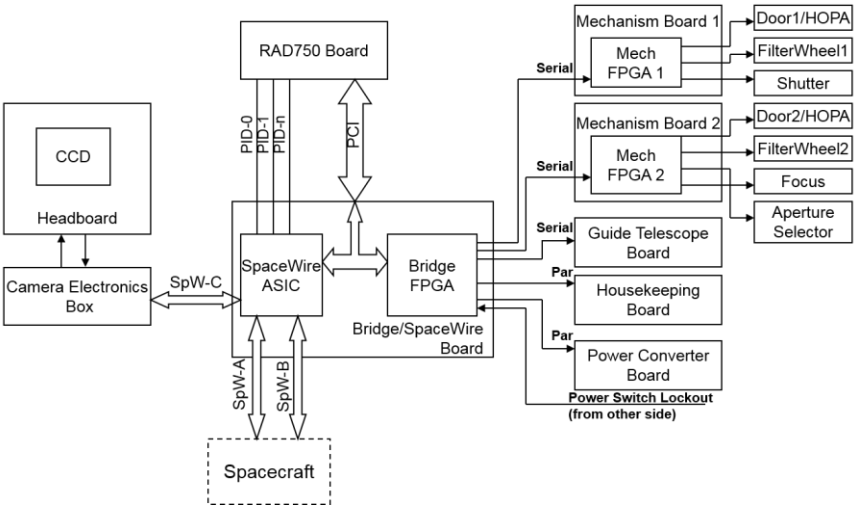

Figure 8-8. The SUVI Electronics Functional Block Diagram

The CEB reads out the CCD at 2 Megapixel/s through either one of two ports at 14-bit resolution with 40 electrons rms noise (including CCD contribution), stores the image data as the CCD image is being read out, uses a high-rate IEEE 1355 SpaceWire low-voltage differential signaling (LVDS) interface with the SEB for image and housekeeping telemetry, and conditions and converts the 28V input power.

The Bridge/SpaceWire Board contains both the SpaceWire ASIC and the Bridge FPGA. The Bridge FPGA provides interfaces for the power system, housekeeping telemetry, mechanism control, the Guide Telescope, and provides a lockout function to prevent conflicts if both RAD750 processors in the SEB are powered at the same time. The SpaceWire ASIC provides redundant 10Mbps SpaceWire links to the spacecraft, a 10Mbps SpaceWire command link to the CEB, and a 50 Mbps SpaceWire data link to the CEB. The Bridge/SpaceWire board combines the CCD image data, GT pointing data, housekeeping, and memory dump data, and passes them to the spacecraft through the SIU on the SPP. The SIU converts the SpaceWire data into RS-422 for transmission over the solar array drive assembly slip-ring. The spacecraft onboard computer extracts and processes the housekeeping and GT pointing data from the combined SUVI data to support fault management and SPP pointing functions.

SUVI data are transmitted to the ground by two paths, low-rate telemetry for housekeeping data only, and via the Raw Data Link for all SUVI image and telemetry data. The data can be received at SOCC in Suitland, Maryland, and the NOAA Space Weather Prediction Center (SWPC) in Boulder, Colorado. In general, image data are downlinked as rapidly as possible after they are acquired.

Power

Electrical power is provided to SUVI from the spacecraft electrical power subsystem. The electrical interface between SUVI and the spacecraft is at the SEB connector panel. The spacecraft delivers both +28V and +70V dc power to SUVI, and these power inputs are protected with fuses within the spacecraft. The spacecraft-to-SUVI electrical harnesses are routed from the spacecraft bus via Solar Array Drive Assembly slip rings and across the SPP Elevation Gimbal Assembly.

The spacecraft provides operational power to the SUVI instrument from the power bus that is regulated at 28.0 ± 2.0 V dc during sunlight operation. SUVI uses two separate and redundant sets of 28V dc input circuits. The first redundant pair serves as the main power inputs and is converted into a number of different voltages by the SEB for the use of various SUVI instrument components and subsystems. The second redundant pair provides power to the CCD decontamination heaters which are used to keep the CCD sensor warmer than the rest of the instrument while the Instrument is turned off, so as to not serve as a contamination “getter.” During eclipse, this primary power bus is controlled by battery voltage and a voltage regulator, which maintains the +28 volt bus. The spacecraft primary bus (70.0 ± 2.0 V dc) provides power to the survival heater power located on the Telescope Subsystem. The input operational power consumption by the SUVI is 90 watts maximum in sunlight and 162 watts maximum during eclipse.

Telescope Subsystem

The STS consists of the ETA, the GTA, and the CEB. The GTA includes the GT and the GT Pre-Amp box. Both the GTA and CEB are mounted on the ETA, as shown in Figure 8-3.

EUV Telescope Assembly (ETA)

The ETA is a 20-cm (8-inch) Ritchey-Chretien telescope that includes a number of mechanisms and sensor packages. The layout of the ETA is presented in Figure 8-10. The SUVI metering tube is the ETA’s primary structure that integrates the main telescope, GTA flexure mounts, aperture door, CEB, camera, radiators, associated housing/adapter and flexure mounts. The struts are

mounted on the metering tube located at the front and aft of the telescope carbon fiber metering tube and interfaces with the SPP. Each of the six mounting struts is identical with adjustment capability and provides the primary load path to the SPP. The GTA is mounted to flexures which are themselves mounted to the ETA metering tube assembly. The Spider Assembly, Front Aperture Housing and Aperture Door are mounted at the front end of the metering tube while the Shutter housing, Filter Wheel Housing, Isolator tube and Detector Housing including radiator are mounted at the aft of the metering tube. The CEB is mounted on the +Z side of the telescope next to the Filter Wheel housing.

The Spider Assembly contains the Focus Mechanism, secondary optics, and the structure to mount to the metering tube assembly. One spoke of the Spider Assembly houses the light emitting diode (LED) Assembly that supports aliveness testing of the ETA focal plane array and camera electronics while the Front Door Assembly is closed.

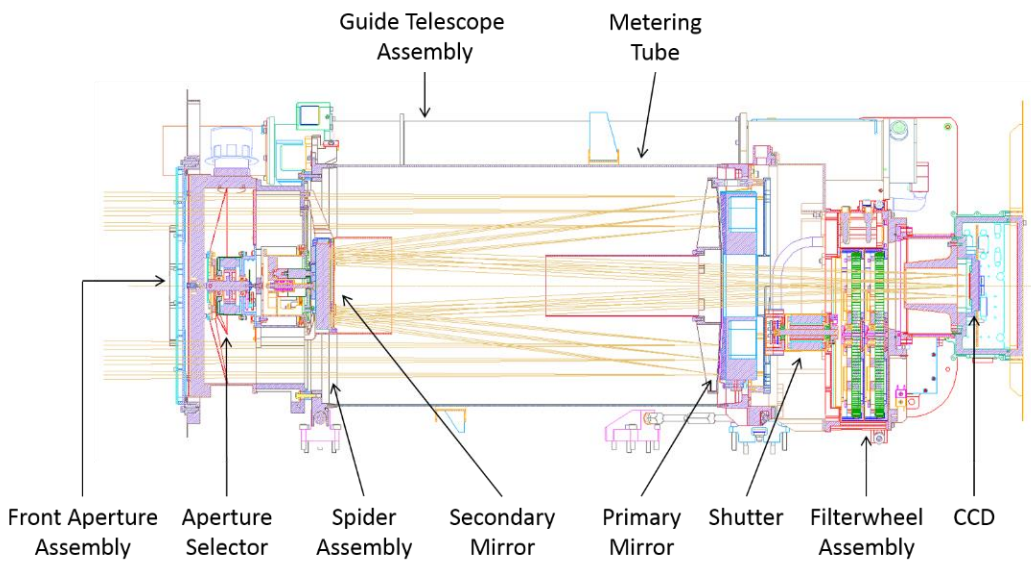

Figure 8-9. ETA Layout

Optics

The SUVI optical design is based on the Solar Dynamics Observatory (SDO) Atmospheric Imaging Assembly (AIA) instrument design modified to meet SUVI's specific performance requirements and comply with SUVI's allocated mechanical envelope. The general optical layout is shown in Figure 8-9.

To meet mission requirements for spectral sensitivity and response, the design combines a normal incidence telescope with multilayer mirror coatings to achieve the required narrow bandwidths. A system of aperture masks and internal baffles are also used to suppress out-of-band radiation and eliminate direct paths for non-solar particle radiation that might otherwise reach the CCD sensor. Each wavelength is accomplished by dividing the aperture into six sectors, each with a different multilayer. As shown below in Table 8-2, the 94Å sector is made of

Molybdenum-Yttrium (Mo/Y) multilayers while the other five utilize a Molybdenum/Silicon (Mo/Si) multilayers.

Table 8-2. SUVI Optical Multi-Layer Prescription

Channel (Å)	Multilayer	Number of Multilayers	Total Film Thickness (Å)	Capping Layer
93.9	Mo/Y	120	5748	33 Å Mo
131.2	Mo/Si	50	3357.5	35 Å Si
171.1	Mo/Si	40	3534	35 Å Si
195.1	Mo/Si	40	4080	35 Å Si
284.2	Mo/Si	20	3049	30 Å Si
303.8	Mo/Si	20	3300	30 Å Si

Mechanisms

The SUVI Telescope is equipped with a set of mechanisms that support the imaging operations or keep the instrument safe and clean of contamination during ground transportation prior to launch, and during launch. The mechanisms are listed in Table 8-3, along with a brief description of their function.

Table 8-3. SUVI Telescope Mechanisms

Mechanism	Description
Front Aperture and Door Assembly	• Consists of a door, a spring-loaded hinge, latch mechanism, and gearbox mechanism for driving the door open. • The latch is operated using redundant paraffin linear actuators. • The drive motors are fully redundant and independent. • The door is designed to sweep 245° to fully open.
Aperture Selector	• Located in front of the spider assembly • Used to select the desired bandpass out of the six wavelength bands.
Focus Mechanism	• Actuated by a DC torque motor that moves the secondary mirror over a ±800 μm range in 3-μm steps • Trims the ETA's initial focus once on orbit • Adjusts telescope focus for slow thermal drifts throughout mission
Focal Plane Shutter Mechanism	• Consists of a circular blade turned by a brushless DC motor • Blade has two openings: a narrow slit and a wider opening to support either sweeping the solar image across the CCD or expose the entire CCD all at once • The blade can also be commanded to dwell to support long exposures.
Filterwheel Mechanism	• Two filterwheels present in the ETA. • Selects the proper filter combination to ensure that the desired channel (wavelength) reaches the detector. • Each forward/aft filterwheel contains 5 positions • The mechanism has a positional accuracy of ±30 arc minutes with a move time less than 1 second between adjacent positions. • Each filterwheel is designed to have redundant thin and thick Al and Zr filters so the telescope can continue to image properly despite the presence of pinholes. • Each wheel has one open position and the aft filter wheel has an additional clear glass filter so that the light leak performance of the entrance filter can be monitored on-orbit.

Camera System

The SUVI camera system primarily consists of a focal plane detector using a CCD, CEB and the associated flex cables and head board. The CEB receives raw image data from the CCD, processes the data, and forwards it to the SEB, via a high speed IEEE 1355 SpaceWire low-voltage differential signaling (LVDS) interface, as shown in Figure 8-8.

The SUVI instrument focal plane contains a 1280×1280 pixel CCD detector. The CCD is a design similar in construction to the proven Solar-B/Hinode Focal Plane Package (FPP) and Solar Dynamics Observatory designs. They feature low-voltage clocking of the serial output register to minimize power dissipation in the clock driver electronics. The CCD is back thinned and back illuminated with 21 μm pixels and operate non-inverted to ensure good full well capacity. The

SUVI thermal control system maintains the CCD operating temperature at -30C or less. The CCD architecture and readout map is shown below in Figure 8-10.

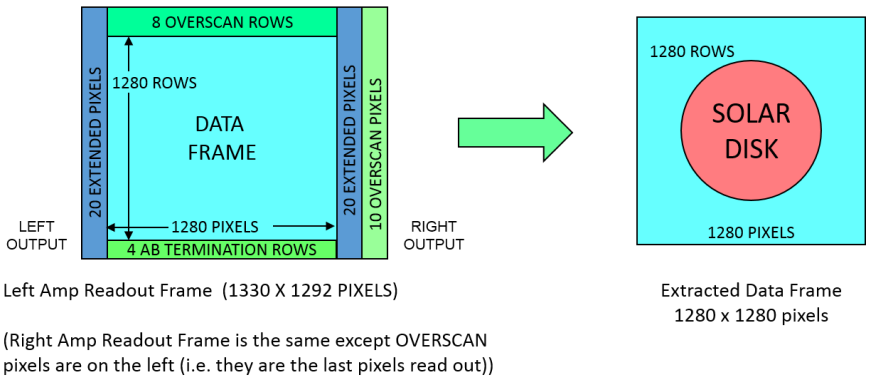

Figure 8-10. CCD Architecture

Guide Telescope Assembly

The SUVI Guide Telescope Assembly (GTA) was designed and built to support the observatory's sun- pointing functions. The GTA, via the SEB, provides solar pointing data to the spacecraft during normal SUVI operation by determining the position of the solar limb relative to the GTA centerline. The GTA is approximately 81 cm (32 inches) in length with a glint-free field of view (FOV) of 10°. The GTA layout is shown below in Figure 8-11 along with a short description of key components. The GTA has a linear range of approximately ±110 arcseconds, and is capable of acquiring the sun within a cone, defined as the acquisition FOV, of approximately ±26 arcminutes. The GTA is designed to operate between 5 °C to 35 °C.

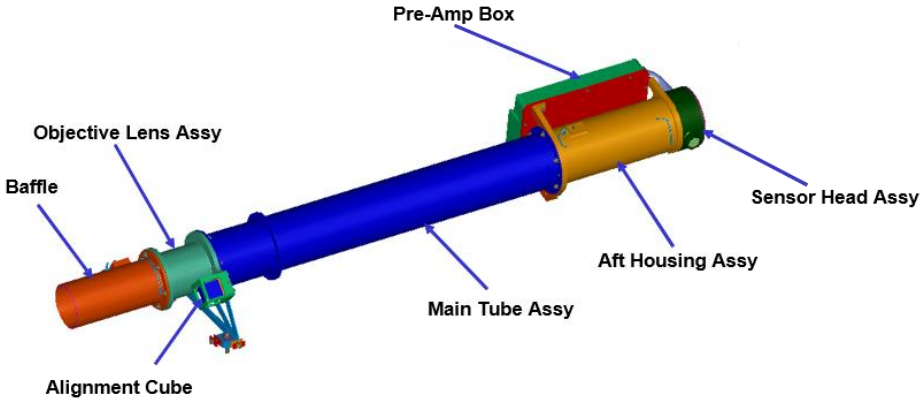

Figure 8-11. GTA Layout

Table 8-4. GTA Components

GTA Component	Description
Optics	• Design derived from Solar Dynamic Observatory (SDO) Atmospheric Imaging Assembly (AIA) and Solar Terrestrial Relations Observatory/ Solar Dynamic Observatory Atmospheric Imaging Assembly (STERO/SECCHI) ground telescope (GT) • Galilean telescope design with a bandpass entrance filter, an objective lens "semi-cemented" doublet and Barlow lens • Lenses are manufactured from radiation hardened glass • Entrance filter consists of a filter plane sandwiched between two pieces of radiation hardened glass
Sensors	• Four redundant pairs of photodiodes arranged in a cruciform pattern • Cruciform is located behind an occulter cone to measure the solar limb position
Pre-Amplifier	• Amplifies the photodiode signals • Built with redundant connectors and ¼" thick aluminum enclosure

Operation Modes

SUVI has five modes which may be used over the course of the GOES mission. They are distinguished by the telemetry generated in each mode. Each of the five modes use event flags to signal specific events that could affect the modes or the telemetry output. SUVI modes are illustrated below in Figure 8-12.

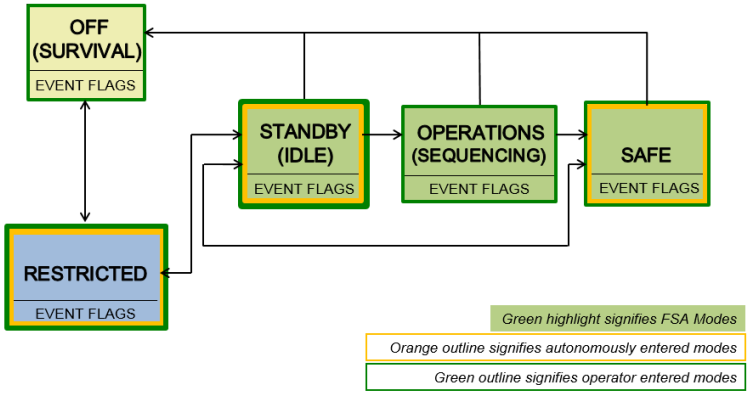

EVENT FLAGS		OFF	RESTRICTED	STANDBY	SEQUENCING	SAFE
DECONTAM*	On/Off	X	X	X	X	X
ECLIPSE	0-3 (Out, In, Pre, Post)	X	X	X	X	X
CALIBRATION	Yes/No				X	
OFFPOINT	Yes/No				X	
DIAGNOSTIC	Yes/No			X	X	X

* In any mode, if the Spacecraft is supplying Decontamination 28V dc input power and SUVI is in eclipse, the main CCD heaters are disabled.

Figure 8-12. The SUVI Instrument Mode and Flow Diagram

SUVI OFF (Survival)

Main SUVI instrument power is off. No instrument telemetry is generated. Power is provided for thermostatically controlled survival heaters from 70V dc bus, and the CCD decontamination heaters are drawing +28V dc power from the spacecraft if they have been turned on by the operator and the spacecraft is power-positive. The temperatures are monitored by the spacecraft telemetry system during this mode using SUVI-provided calibrated thermistors and spacecraft-provided conditioning circuitry. Temperatures monitored in this mode include the mirror assemblies (both primary and secondary mirrors), the CCD assembly, the door mechanisms, the guide telescope (both forward and aft ends), the camera electronics box, and SUVI electronics box.

Restricted Mode

In this mode, SUVI is drawing +28V dc power. SUVI housekeeping and engineering telemetry is generated. Diagnostic and event message telemetry may also be generated. This mode is designed for software maintenance; i.e. debugging and updating. The instrument enters this mode either after the initial boot-up or by a command from one of the other modes. Computer Software Configuration (CSC) items may be loaded and unloaded in this mode. The software will not be fully operational until all flight software CSCs are loaded. None of the SUVI functional processes are active in this mode.

Standby (Idle) Mode

In this mode, SUVI is drawing +28V dc power and all flight software CSC's have been loaded and activated. No updates to the software can be performed in this mode. SUVI housekeeping and engineering telemetry is generated. Diagnostic and event message telemetry may also be generated. One or more sub-systems may be powered off, as indicated by the sub-mode. Thermal control may be inactive. Operational constraints on sequencing and image sizes are disabled. The SUVI instrument can be in this mode while the telescope door is closed.

Operations (Sequencing) Mode

This is the mission mode. This mode may be entered only by ground command. All subsystems are powered on, the telescope door must be open and thermal control is enabled. Low-level device control has been disabled. This mode minimizes the possibility of inadvertent interruption of the mission observational program. Housekeeping, engineering telemetry and science data telemetry are generated. Diagnostic and event message telemetry may also be generated as needed.

The nominal imaging sequence is shown in Figure 8-13. The full sequence takes four minutes to complete and is divided into twenty-four 10-second slots during which an image is acquired and processed. Twenty-two images are allocated across the six wavebands to maximize science efficacy. Two calibration images are also collected during every 4-minute sequence. During eclipse, SUVI can be commanded to perform mechanism characterization tests.

Minute	1						2						3						4					
Image in Min	1	2	3	4	5	6	1	2	3	4	5	6	1	2	3	4	5	6	1	2	3	4	5	6
Image No.	1	2	3	4	5	6	7	8	9	10	11	12	13	14	15	16	17	18	19	20	21	22	23	24
Time	0:10	0:20	0:30	0:40	0:50	1:00	1:10	1:20	1:30	1:40	1:50	2:00	2:10	2:20	2:30	2:40	2:50	3:00	3:10	3:20	3:30	3:40	3:50	4:00
SUVI Sequence Structure	94Å	94Å	94Å	195Å	195Å	171Å	171Å	131Å	131Å	131Å	195Å	195Å	94Å	94Å	94Å	Cal	Cal	195Å	284Å	284Å	304Å	304Å	195Å	195Å
Eclipse Flag	Eclipse Scripts to acquire CTR and Delay data for mechanisms																							

Figure 8-13. The Nominal SUVI Image Sequence

Safe Mode

SUVI enters this mode upon receiving an “Enter Safe Mode” command or upon detecting an internal fault. The safe mode is used to prepare the instrument to lose power and allows for a programmed and ordered shutdown of the SUVI subsystems: all EEPROM operations are stopped; image sequencing is stopped; and the shutter is closed. Thermal control is maintained by the instrument. Only a limited set of commands are accepted in this mode. All instrument telemetry is generated.

Event Flags

Event flags are used to signal specific events that could affect the modes or the telemetry output. They essentially act as “sub modes” and are not mutually exclusive so SUVI may be in a particular mode with two or more event flags.

Ground Processing

The Level 1b SUVI data product is an image of the sun in one of the six SUVI ultraviolet wavelengths in full space-time resolution, with radiometric and geometric corrections applied. The image has been converted to physical units, and supplemental information for further processing is appended as metadata. The image is oriented in the same configuration as if the user was viewing the sun from aboard the spacecraft – solar north will be in the top half of the image and solar east will be in the left half of the image.

Ground processing of the downlinked SUVI images is carried out by the SUVI-designed Ground Processing Algorithm (GPA). The GPA reduces and processes the information from the raw image data received from the SUVI CCD readout onboard the S/C into usable level 1b level data products. Reduction of raw image data follows a series of steps to manipulate the data stored in each pixel of the image in order to produce a numerical value in each pixel that corresponds accurately to the number of photons that were incident on that pixel during the image exposure. Through reduction of the raw image data, by removing error sources, an accurate representation of the field of view (FOV) at the time the image was taken can be reproduced. The SUVI raw image data uses a number of calibration factors including fixed properties of the instrument (primarily the CCD, camera, and electronics) measured on the ground prior to launch, and on-orbit Instrument and Spacecraft factors that are monitored in real time because of variations based on time, temperature and other environmental factors.

9. GOES-R Communications Subsystem

The mission of the GOES-R System is to acquire and disseminate environmental data from a near-equatorial Earth orbit at geostationary altitude. The Communications Subsystem provides the following functions:

- Transmission of instrument data to the Command and Data Acquisition (CDA) Stations
- Transmission of spacecraft telemetry to the CDA Stations
- Reception of spacecraft commands from the CDA Stations
- Two-way ranging and Doppler from CDA Stations and DSN Stations
- Relay of Unique Payload Services signals in support of:
  - GOES Rebroadcast
  - Emergency Managers Weather Information Network broadcasts
  - Search and Rescue
  - Data Collection Platforms
- Antenna reception of GPS Navigation signals

Figure 9-1 outlines the GOES-R RF interfaces between the Communications Services to accomplish these functions. The GOES-R Communications Subsystem consists of a raw data link and six (6) bent pipe services as depicted in Figure 9-2. A suite of transponder payloads provide communications relay services and GOES mission data transmission. The suite consists of the Data Collection System (DCS), the High Rate information Transmission/Emergency Managers Weather Information Network (HRIT/EMWIN), GOES Rebroadcast (GRB), GOES Raw Data Link (RDL) system, and the Search and Rescue Satellite-Aided Tracking (SARSAT) system. The GRB transponders consist of dual polarized X-band uplink and dual polarized L-band earth coverage downlink. The HRIT/EMWIN transponder is an S-band uplink to L-band earth coverage downlink narrow bandwidth transponder. The SAR and Data Collection Platform Report (DCPR) services are UHF uplink to L-band earth coverage downlink narrow bandwidth transponders. The Data Collection Platform Command (DCPC) service is an S-band uplink to UHF earth coverage downlink narrow band transponder.

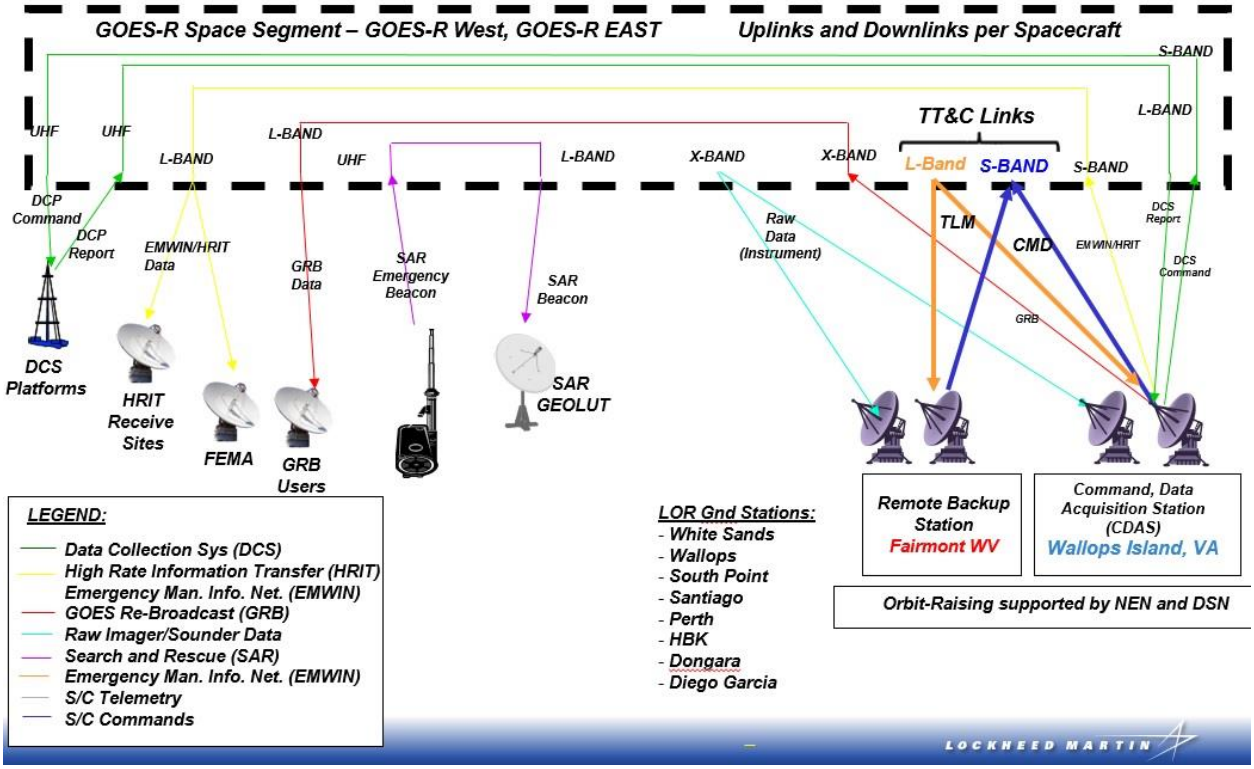

Figure 9-1. Communication Links Overview

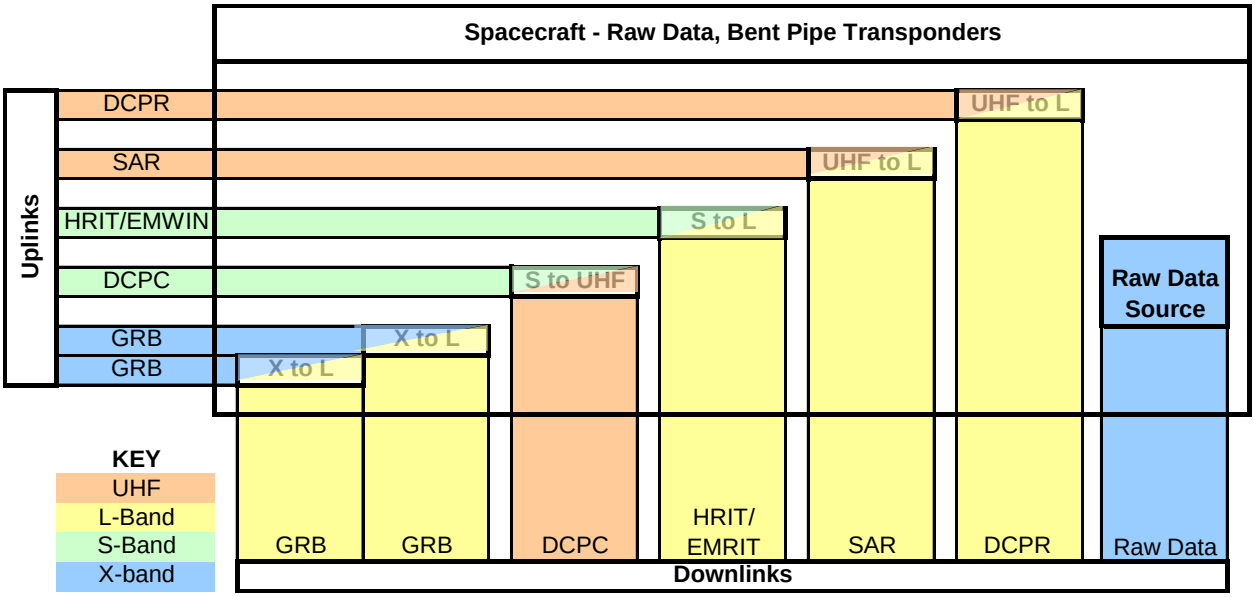

Figure 9-2. GOES Bent Pipe Transponders

The Tracking, Telemetry, and Control (TT&C) Subsystem provides telemetry, tracking, and command functions through orbit-raising and normal on-station operations.

The Communications service functions are:

- Provide S-band Orbit-Raising Tracking, Telemetry and Control (ORTT&C) communications for Launch and Orbit Raising (LOR) command, telemetry and tracking
- Provide S-band ORTT&C and L-Band Command and Data Acquisition (CDA) (housekeeping) TT&C communications for on-orbit command, telemetry and tracking
- Support terrestrial and oceanographic Data Collection Platforms (DCPs) via the Data Collection Platform Command (DCPC) & Data Collection Platform Report (DCPR) links
- Relay High Rate Information Transmission (HRIT) and imaging data between Earth terminals and relay the EMWIN broadcast on the HRIT/EMWIN
- Provide rapid detection of distress messages from the Search and Rescue (SAR) Emergency Locator Transmitters (ELTs) and Emergency Position Indicating Radio Beacons (EPIRBs)
- Rebroadcast processed GOES sensor data via the GRB data link

During LOR Mission phase, GOES-R operations will be conducted from the NOAA NSOF supported by a global station network. This network will support all command, telemetry and tracking requirements from post-separation acquisition through all apogee thruster firings and deployments.

Post-Launch Checkout position at 89.5° W and post-launch test operations will be supported primarily by the NOAA ground station. Ground support stations provide backup, tracking and emergency support during all phases of the GOES missions for the life of the spacecraft series.

GOES Rebroadcast (GRB)

GOES Rebroadcast is the primary space relay of L1b products and will replace the GVAR service. GRB will provide full resolution, calibrated, navigated, near-real-time direct broadcast data.

The content of the data distributed via GRB service includes the full set of L1b products from all instruments onboard the GOES-R series spacecraft. This concept for GRB is based on analysis that a dual-pole circularly polarized L-band link of 12 MHz bandwidth may support up to a 31-Mbps data rate – enough to include all ABI channels in a lossless compressed format as well as data from GLM, SUVI, EXIS, SEISS, and MAG.

Data Collection System (DCS)

The DCS is a satellite relay system used to collect information from Earth-based data collection platforms that transmit in-situ environmental sensor data, such as stream or river flow, tide-levels, weather conditions, etc. The transmissions can occur on predefined frequencies and schedules, in response to thresholds in sensed conditions, or in response to interrogation signals. The transponder on board the GOES-R series satellites detects this signal and then rebroadcasts it so that it can be picked up by other ground-based equipment. Federal, state and local agencies then monitor the environment through the transmission of observations from these surface-based data collection platforms. The platforms can be placed in remote locations and left to operate with

minimal human intervention. The DCS thus allows for more frequent and more geographically complete environmental monitoring. The DCS data flow is depicted in Figure 9-3.

In the GOES-R era, the number of user-platform channels were expanded from 266 to 433. There was also a frequency change from 1696 MHz to 1679 MHz, which required the replacement of users' Low Noise Block (LNB) feeds. Direct Readout Ground Station (DRGS) manufacturers were informed of this change. Data transmission rates in the GOES-R era are 300 bps and 1200 bps. There was no change to the data access policy.

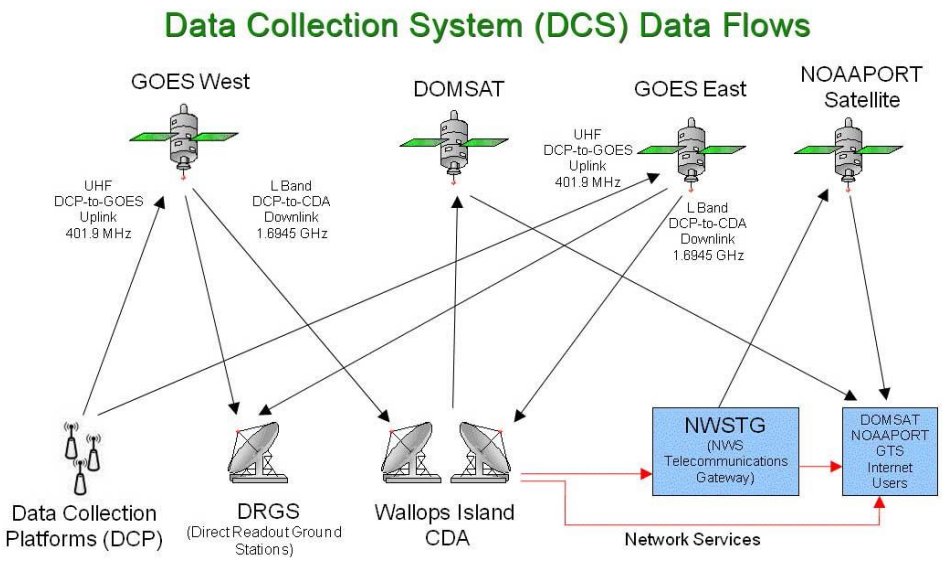

Figure 9-3. DCS Data Flows

High Rate Information Transmission (HRIT)/Emergency Managers Weather Information Network (EMWIN)

EMWIN is a direct service that provides users with weather forecasts, warnings, graphics, and other information directly from the NWS in near real time. The GOES EMWIN relay service is one of a suite of methods to obtain these data and display the products on the user's personal computer. The HRIT service provides broadcast of low-resolution GOES satellite imagery data and selected products to remotely located user HRIT Terminals.

GOES Raw Data Link (RDL)

The RDL channel broadcasts raw data coming from the GOES instruments directly down to the Ground Stations. These stations are the NSOF in Suitland, Maryland, and the WCDAS at Wallops, Virginia.

Search and Rescue Satellite Aided Tracking (SARSAT)

As an integral part of the COSPAS-SARSAT international search and rescue satellite program, NOAA operates the SARSAT system to detect and locate mariners, aviators, and other recreational users in distress almost anywhere in the world at any time and in almost any condition. This system uses a network of satellites to quickly detect and locate distress signals from emergency beacons onboard aircraft, vessels, and from handheld personal locator beacons (PLBs). The SARSAT transponder that will be carried onboard the GOES-R series satellites

provide the capability to immediately detect distress signals from emergency beacons and relay them to ground stations - called local user terminals. In turn, this signal is routed to a SARSAT mission control center and then sent to a rescue coordination center which dispatches a search and rescue team to the location of the distress.

GOES-R continues the legacy Geostationary SAR (GEOSAR) function of the SARSAT system onboard NOAA's GOES satellites which has contributed to the rescue of thousands of individuals in distress. The SARSAT transponder was modified slightly for the GOES-R era by being able to operate with a lower uplink power (32 dBm), enabling GOES-R series satellites to detect weaker signal beacons. An overview of the COSPAS-SARSAT System is shown below in Figure 9-4.

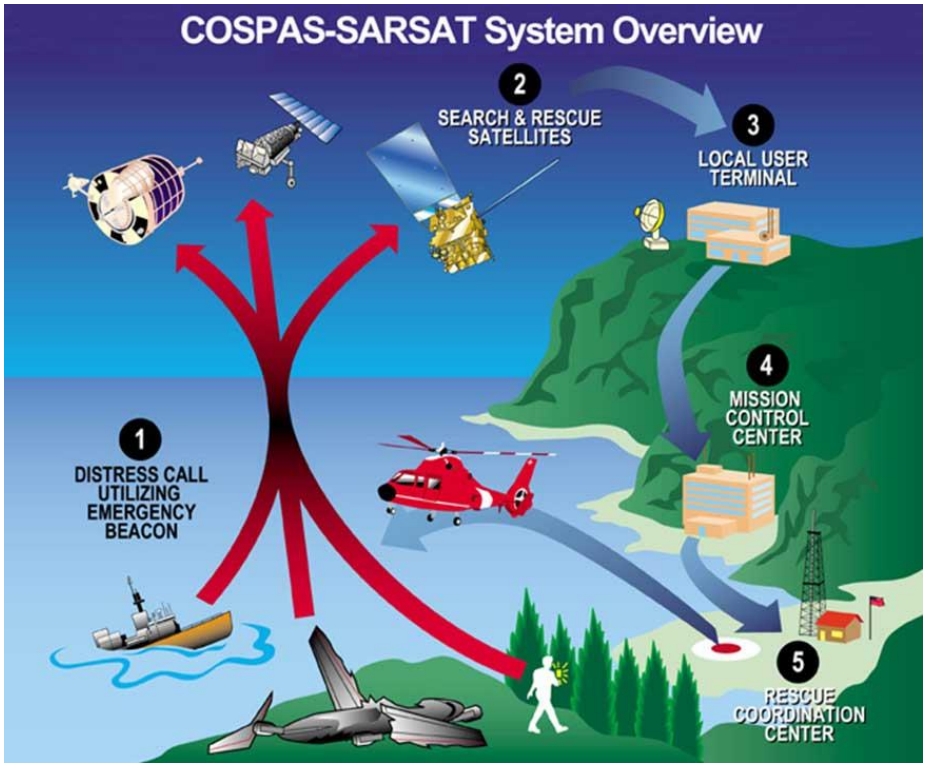

Figure 9-4. COSPAS-SARSAT System Overview

Tracking, Telemetry, and Command (TT&C)

The TT&C subsystem provides telemetry, tracking, and commands through orbit raising, orbit-raising contingency, normal on-station operations, and on-station contingency. The TT&C subsystem can be configured differently depending on the particular phase of the mission. Flexibility has been designed into the architecture in order to ensure maximum capability and functionality throughout the GOES-R series mission. The on-board TT&C assemblies consist of a series of antennas, as shown in Figure 9-5, and electronics boxes, which are each further described below.

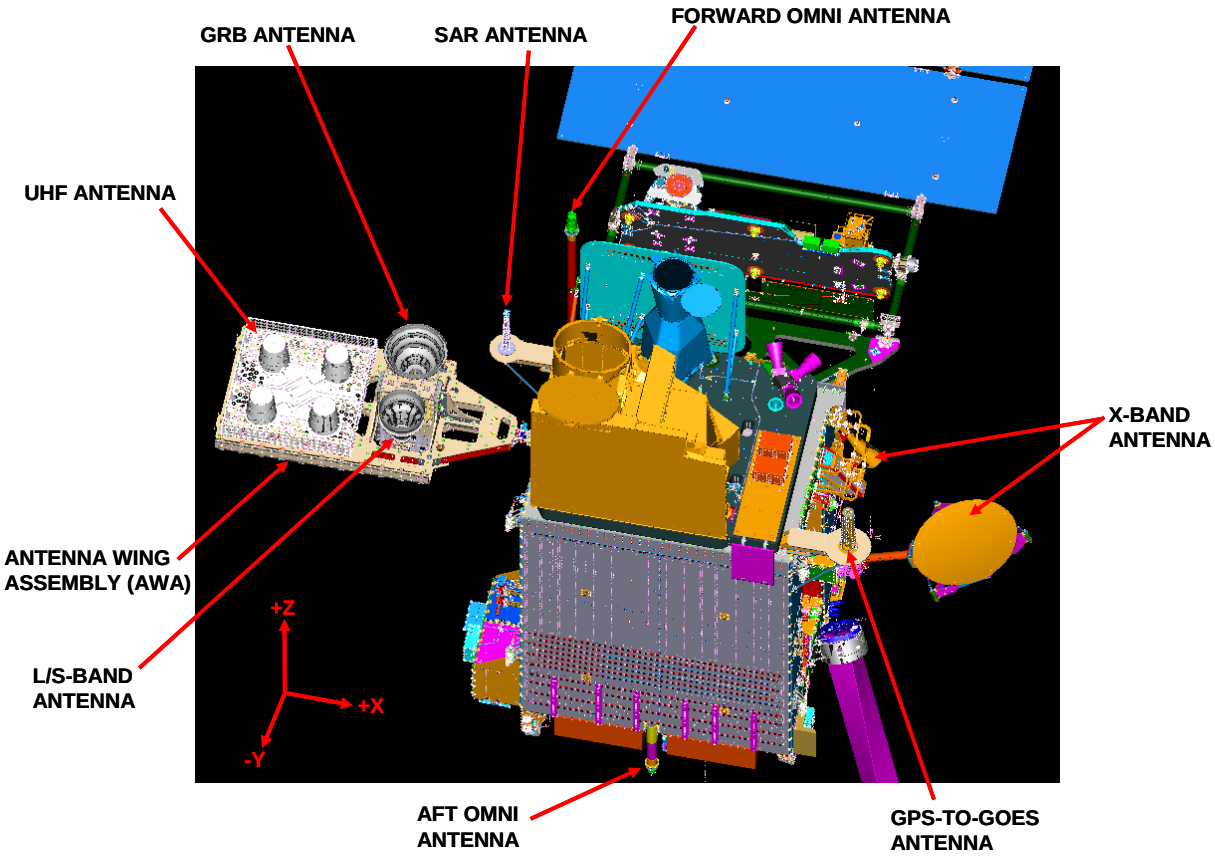

Figure 9-5. Communication Subsystem Antenna Locations

GRB Antenna

The GRB antenna, which is mounted on the Antenna Wing Assembly (AWA), transmits a dual circular-polarized global coverage beam. The antenna is composed of a multimode horn, polarizer and waveguide to coax transition. The GRB antenna receives processed, reformatted sensor data from WCDAS/RBU stations and rebroadcasts it to a large number of outlying ground GRB User Terminals (GRBT). This antenna has a ±20 degree field of view cone

L/S-Band Antenna

The L/S-Band antenna is located on the AWA. This antenna transmits and receives a linearly polarized global coverage beam. It is composed of a high efficiency horn, diplexer and waveguide-to-coax transition. The L/S-Band antenna is used for the DCPR comm service.

UHF Antenna

The UHF antenna transmits and receives a right hand circularly polarized earth coverage link between the GOES-R spacecraft and the ground users. The design consists of a 4-Element UHF Helix Array mounted on an aluminum ground plane that is excited by a beam forming network.

GPS to GOES-R Antenna

The GPS Antenna receives a Right Hand Circularly Polarized (RHCP) L-Band signal from the GPS satellite constellation. The antenna consists of a ground plane mounted helix radiating element.

X-BAND ANTENNA

The X-Band Antenna transmits and receives a linearly polarized communication link to and from the primary GOES-R dedicated ground station at Wallops Command and Data Acquisition Station (WCDAS) in Virginia as well as the remote backup (RBU) facility at Fairmount, West Virginia.
The Antenna consists of a single surface parabolic reflector illuminated by a feed network consisting of horn, orthomode transducer, and two diplexers. The reflector is deployed and pointed by a 2-axis gimbal allowing orbital slot flexibility.

SAR Antenna

The SAR Antenna is required to transmit right hand circular polarized global coverage beams. The Antenna is composed of a ground plane mounted dual-tapered helix radiating element.

TT&C Antenna – Forward Omni

The Forward Omni Antenna provides independent hemispherical and toroidal beams. The Forward TT&C Omni Antenna is a combined Bicone/Crossed-Dipole configuration. IT is mounted on a mast extending from the spacecraft's earth panel.

TT&C Antenna – Aft Omni

The Aft Omni provides an independent hemispherical beam. The Aft TT&C Omni Antenna is a Crossed-Dipole configuration. The Aft Omni Antenna is mounted on a long mast extending from the spacecraft base panel.

TT&C Electronic Assemblies

The communications subsystem electronics assemblies and their functions are as follows:

- **Traveling Wave Tube Amplifiers**: amplify and linearize the RF input signals in the downlink band
- **X-Band modulator**: provides continuous phase-shift key modulation
- **X-Band receiver**: receives and process two X-Band uplink signals and down converts the signals as inputs to the GRB L-Band transmitter. The two independent X-Band channels, designated CH1 and CH2 operate in fixed gain mode and are narrowband filtered.
- **UHF receiver**: receives and processes two uplink signals at UHF. The two channels, designated CH1 (DCPR) and CH2 (SAR), are amplified, narrowband filtered, and up converted to L-Band.
- **S-Band transponder**: provides command, telemetry and ranging functions during launch and Orbit raising operations of the GOES-R satellite. It is primarily used during orbit-raising, but is available during normal on-station operations. In addition, the S-band Transponder is used on-station to determine the range to the satellite, to provide secondary satellite telemetry on the S-Band downlink and to receive satellite commands in the event the CDA command link is unavailable.
- **S-Band receiver**: receives and processes two uplink signals at S-Band. The two channels, designated CH1 (EMWIN-HRIT) and CH2 (DCPC), are amplified, narrowband filtered, and down converted to L and UHF band.
- **CDAS transceiver**: provides command (CMD) and telemetry (TLM) functions during On Station operations of the GOES-R satellite. The CDAS transceiver is comprised of a Command receiver and Telemetry Transmitter constructed as a single package. The CDAS Command Receiver receives and demodulates a Binary Phase-Shift Key (BPSK) direct-modulated RF command signal and provides the demodulated digital data and clock for processing by C&DH. In addition, the CDAS Telemetry Transmitter receives digital data which is sued to modulate and transmit a BPSK direct-modulated RF output.
- **10 Mhz reference oscillator**: provide a reference signal to the communications subsystem components that require a highly stable frequency source. The 10 MHz Reference Oscillator is a standalone device which generates a stable 10 MHz output.

10. Command and Data Handling Subsystem

The Command and Data Handling (C&DH) Subsystem is responsible for gathering, formatting, and delivering data throughout the spacecraft. It provides several platforms for the flight software to execute and serves as the validator and formatter for all ground communication. The C&DH subsystem block diagram is shown in Figure 10-1. The C&DH is comprised of the following components:

- Command and Telemetry Processor (CTP)
- On Board Computer (OBC)
- Remote Interface Units (RIU), quantity 4
- Sun Pointing Platform Interface Unit (SIU)
- Command Decryption Unit Assembly (CDUA)
- Current Sensor Unit (CSU)
- Transient Suppression Unit (TSU), quantity 7

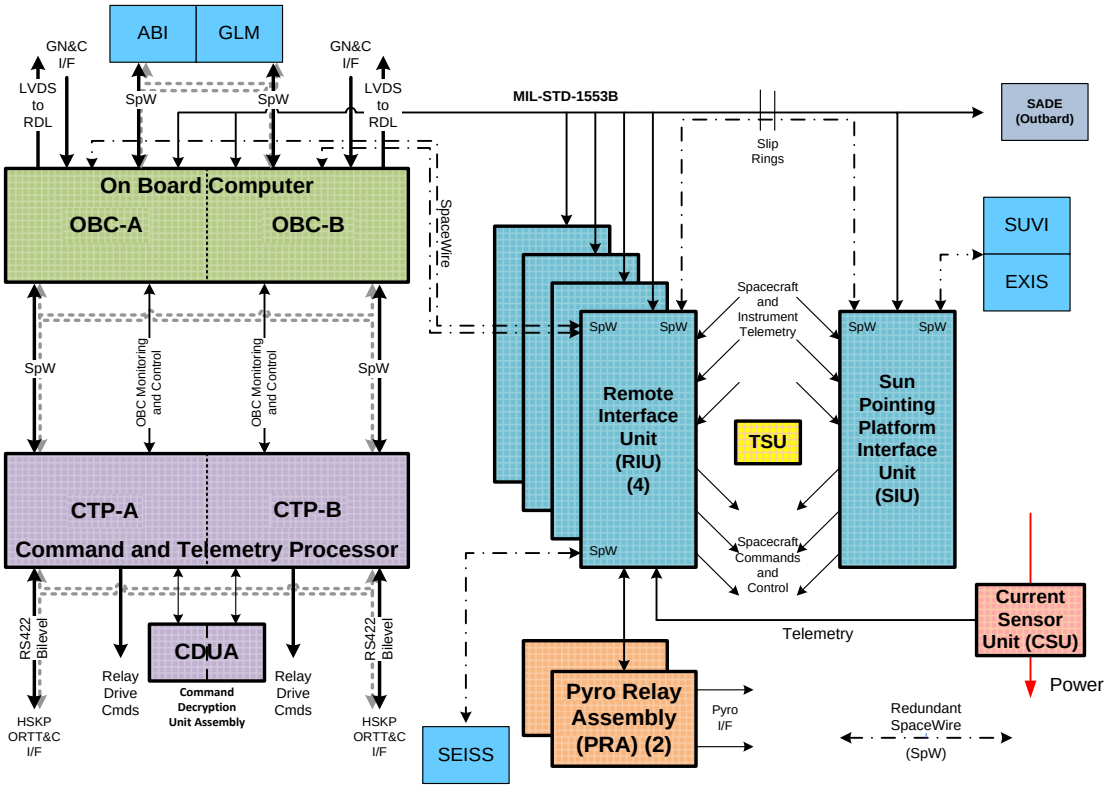

Figure 10-1. Block Diagram of the GOES-R C&DH

Command and Telemetry Processor (CTP)

The CTP is the primary gateway for all uplink commanding and downlink state of health telemetry in the GOES system. The CTP receives digital command data from the communications subsystem via the CDAS or ORTT&C uplinks and validates the stream using CCSDS standards before the command is allowed to be executed. The CTP is a dual sided unit and operates in a hot-hot configuration. Each side of the CTP continually monitors all four uplink paths from the communications subsystem and is always command receptive on all channels. The CTP also contains discrete commanding capabilities to turn various components on or off via the Relay Drive Card (RDC).

As well as generating C&DH State of Health telemetry packets, the CTP receives FSW telemetry data from the On Board Computer (OBC) via SpaceWire (a spacecraft communication network based in part on the IEEE 1355 standard of communications). The CTP formats all state of health downlink telemetry in the proper CCSDS format and then delivers the CCSDS transfer frames to the CDAS and ORTT&C for downlink. The CTP's downlink is selectable at 1, 4, and 40 kilo-symbols per second (ksps).

The CTP is also responsible for monitoring the health of the OBC and can reboot or reconfigure the OBC if a fault is detected. This function is handled by the Redundancy Management Card (RMC). The RMC receives two types of recurring heartbeat signals from the OBC, discrete and critical bus heartbeats. If either of the heartbeats are not received by the RMC in a configurable amount of time, the RMC will first attempt to reboot the ailing OBC and if this fails, the RMC will command the standby OBC to operational and FSW will boot on the new processor.

Figure 10-2. The Command and Telemetry Processor (CTP)

On Board Computer

The OBC is an internally redundant component that provides processing resources necessary for FSW to gather and route spacecraft component and instrument commands and data. In addition, the OBC provides direct SpaceWire interfaces to the ABI and GLM instruments and functions as the data collection terminal for all instrument data for downlink to the ground through the Raw Data Link (RDL).

The OBC acts as the 1553 Bus Controller for the spacecraft, communicating to all of the Remote Interface Units (RIU), Solar Array Drive Electronics (SADE), and star trackers among other components. There is a SpaceWire link between the OBC and CTP where FSW receives validated uplink commands and data files as well sending spacecraft telemetry packets to the CTP for downlink. The OBC also has direct low latency connections to the Inertial Measurement Units (IMU) and Global Positioning System Receiver (GPSR). This data is relayed to the FSW for constant attitude and pointing calculations to be maintained.

The SpaceWire Router Card (SWRC) within the OBC receives all of the instrument science data and formats it for downlink through the RDL. It is also the source for the entire SpaceWire network for all of the instruments on the spacecraft. Depending on the link, the data rates are either 132 Mbps or 10 Mbps. All instrument science data is delivered to the SWRC where it is CCSDS formatted, Low Density Parity Check encoded and delivered to the RDL for downlink at a rate of 120 Mbps.

Figure 10-3. The On Board Computer (OBC)

Remote Interface Unit (RIU) and Sun Pointing Platform Interface Unit (SIU)

There are four RIUs (shown below in Figure 10-4) and one SIU on the spacecraft. The RIU/SIU component provides for reception of commands over the 1553 bus data for distribution to the other subsystems of the spacecraft. The RIU/SIU also, upon receiving a telemetry request over the 1553 bus, collects, processes, and transmits the data via the 1553 bus to the bus controller, the OBC. The interfaces are illustrated in Figure 10-5.

Figure 10-4. Remote Interface Unit (RIU)

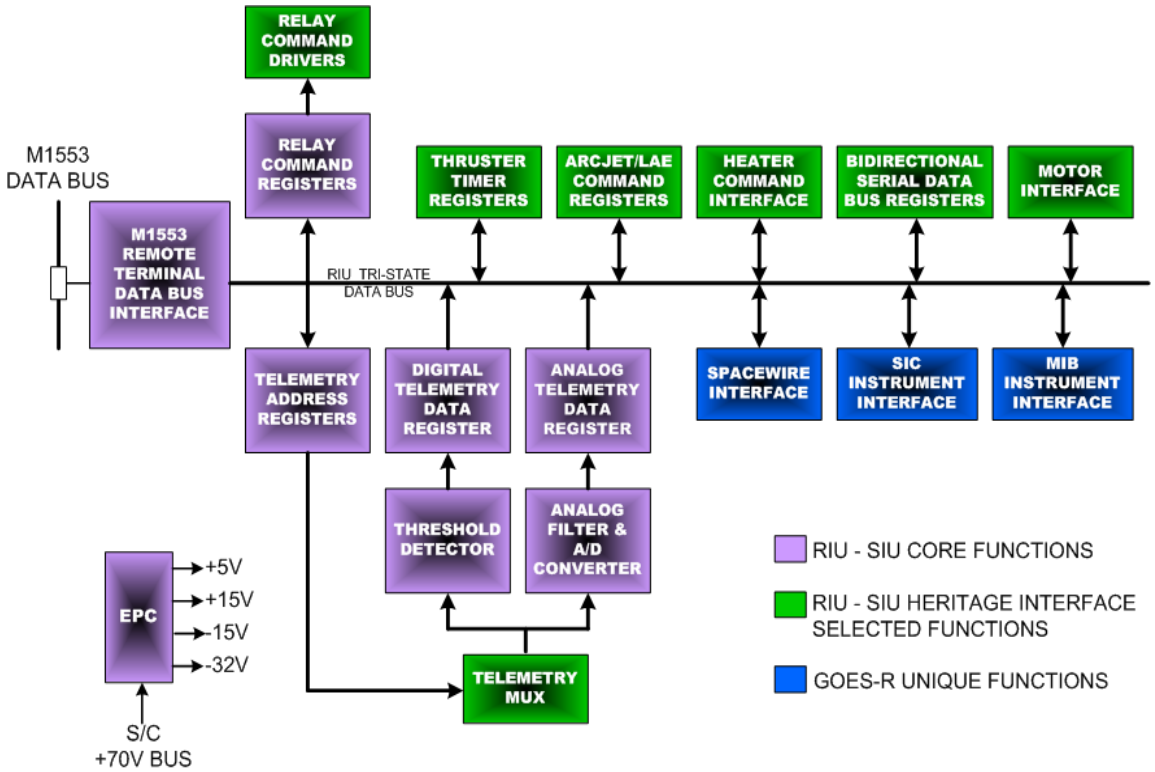

Figure 10-5. RIU/SIU Block Diagram

The RIU/SIU is of modular design. Three boards provide the core circuitry necessary for each RIU/SIU: an Electronic Power Converter (EPC) board, a Control & 1553 Board, and a Harness Board/Backplane. The modular design is accomplished by providing a standardized Harness Board interface which allows for the necessary combination of boards tailored for mission requirements.

The RIU/SIU common major functions and operational features are:

- MIL-STD-1553B remote terminal function
- Collecting and processing satellite telemetry in response to a request received via 1553 bus
- Providing requested telemetry consisting of analog, passive, digital logic level, and digital relay status back to the bus controller
- Issuing relay drive commands distribution to spacecraft components
- Providing heater control circuits to switch the spacecraft 70V bus to the heaters
- Providing SpaceWire router functionality, interfacing to the SEISS, SUVI, and EXIS instruments

The RIU's additional functions and operational features are:

- Thruster [Rocket Engine Assembly (REA), and Liquid Apogee Engine (LAE)] control circuits to switch the spacecraft 70V bus to the thruster solenoids and thruster heaters
- Motor Drive control function to drive antenna gimbals to the desired pointing direction
- Provide command and telemetry interfaces to control Reaction Wheel Assemblies (RWA) for controlling spacecraft attitude and orientation
- Provide command and telemetry interfaces to the Magnetometer
- Provide excitation and telemetry interfaces to measure Accelerometer assemblies, used for determining spacecraft stability
- Provide telemetry interfaces to monitor the Coarse Sun Sensor Assemblies, used for determining general spacecraft orientation
- Provide command and telemetry interfaces to interface with the Fine Sun Sensor Assembly, used for refined spacecraft orientation
- Provide AC current to Magnetometer heaters, needed to power special heater assemblies for the Magnetometer instrument
- Collect lithium-ion cell bank voltage measurements and provide lithium-ion battery balancing functionality, used for power subsystem control and conditioning

Command Decryption Unit Assembly (CDUA)

The CDUA is a standalone component that exclusively interfaces with the CTP. This assembly houses the decryption ASIC that meets Committee for National Security Systems Policy (CNSSP-12) requirements. Encrypted data is passed to the CDUA by the CTP in 128 bit CCSDS code blocks. Upon successful decryption, the CDUA passes the 64 bit unencrypted message back to the CTP where it is reassembled into the CCSDS transfer frame. Only after successful decryption can any CCSDS processing be performed on uplink transactions. The GOES-R series of satellites utilizes decryption (when enabled) only on the uplink. Downlinked telemetry is always unencrypted. There are 16 unique keys per side of the CTP (total of 32 different keys). Each side of the CDUA only interfaces with a single side of the CTP, therefore to send commands through the B side CTP, a different key must be used. The reason for unique keys is twofold. First, by having different keys interfacing with each side of the CTP ensures that both sides of the CTP will not validate an uplink command and send two copies of the same command to FSW. Second, per decryption requirements, keys are only valid for a certain period of time. Multiple keys are needed to ensure the 15 year mission is satisfied.

Current Sensor Unit (CSU)

The Current Sensor Unit, shown below in Figure 10-6, provides increased perceptibility into faults during the Integration and Test phase (I&T) and Operations. The CSU measures 12 different 70V and 28V power lines which are comprised of 12 primary and 12 secondary channels (24 total). All primary channels are independent from the secondary channels so should a failure occur on one channel it would not affect the redundant component. Current passes through the CSU from the

Electrical Power Subsystem (EPS) and then is connected to the individual user component. The CSU measures the amount of current passing through the unit, converts it to an analog voltage representation and then passes that analog value to an RIU where it is converted to a digital representation and passed back to FSW for packaging and downlinking to the ground.

Figure 10-6. Current Sensor Unit (CSU)

Transient Suppression Unit (TSU)

The TSU, shown below in Figure 10-7, interfaces directly with the harness and spacecraft structure. The TSU is not designed to be internally redundant. The spacecraft system has the responsibility to assign the TSU channels to meet system fault tolerance requirements. The TSU is a passive extension to the harness. The TSU cannot be commanded, does not provide telemetry, and does not draw nor dissipate electrical power.

There are four different spacecraft channel types that the TSU can interface with: analog/digital telemetry, low voltage serial telemetry, 70V power, and -32V discrete relay drives. Each circuit type is designed to protect ESD-sensitive hardware circuitry on both sides of the TSU interface. In the event that the spacecraft harness becomes charged, potentially harmful energy will attempt to discharge to ground through whatever electrical path it can find. Often, this is through sensitive electronics. The TSU is designed to provide a discharge path that is safe for the spacecraft components. Seven of these TSUs are installed on the spacecraft and are located throughout the bus so as to provide protection to all at-risk hardware.

Figure 10-7. Transient Suppression Unit (TSU)

11. Electrical Power Subsystem

The Electrical Power Subsystem (EPS) provides tightly regulated, fault tolerant 70V and 28V power to the spacecraft loads and instruments. The power is always on. It also provides redundant unregulated 28V power to the deployment devices. The architecture is shown in Figure 11-1. The major components are:

- Solar Array: provides primary power to the spacecraft
- Batteries: provide power when solar array power is less than the total spacecraft load and instrument demand, e.g. during eclipses
- Power Regulation Unit (PRU): regulates the flow of power from the Solar Array and batteries to the spacecraft loads and instruments (green boxes in the figure below)
- Fuse Board Assemblies (FBAs): provide over-current protection to prevent power fault propagation
- Pyro Relay Assemblies (PRAs): house, enable and fire relays to the deployment devices

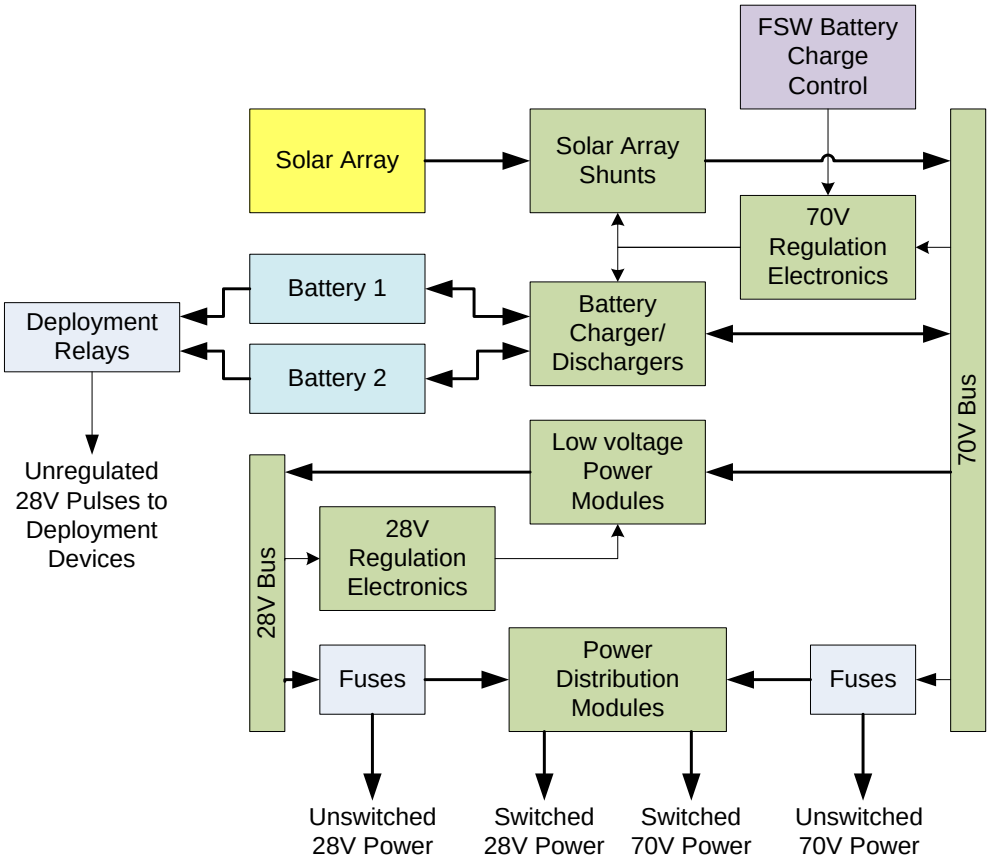

Items in green reside in the Power Regulation Unit

Figure 11-1. Electrical Power Subsystem Architecture

The EPS uses a direct energy transfer to distribute power efficiently. The 70V bus is regulated to 70V ± 0.6 V. Shunts in the PRU control Solar Array power. Shunts are turned on/off when less/more power is needed to maintain the bus at 70V. When a shunt is off, power from that solar array circuit flows directly onto the 70V bus. The Battery Charger/Dischargers (BCDs) use buck/boost converters to regulate power to/from the batteries. When more power is needed than the Solar Array can provide, the BCDs are commanded to discharge the batteries. The FSW monitors battery telemetry. When the battery state-of-charge is low, the FSW commands a charge rate to the PRU. When excess Solar Array power is available, the PRU automatically charges the batteries up to the charge rate commanded by the FSW. Regulated 28V power is developed from the 70V bus using buck converters. The 28V bus is regulated to 29.3V ± 0.6V. With harness drops, the voltage at the loads is guaranteed to be 28V ±-2 V. Switched or un-switched power is provided to the loads as needed. Unregulated 28V busses are tapped from the batteries to provide pulses to deployment devices via relays in the PRA.

Total load power is typically a little more than 4000 W. During North South Station Keeping (NSSK) maneuvers it peaks at 8000 W. The Solar Array provides 5000 W to 5500 W at end-of-life with no failures. The batteries can support 4750 W for 1.2 hours using only half their capacity. The worst case power margin throughout the mission is 17% with a Solar Array circuit failed and a battery cell bank failed. The power budget is shown below in Figure 11-2 (instruments include ABI, GLM, SEISS, SUVI, EXIS, and MAG; Communication Services include SAR, GRB, HRIT/EMWIN, and DCPR, X-Band Downlink, and TTC RF; Spacecraft Support includes EPS Electronics, Power Distribution Losses, GNC, C&DH, and heaters).

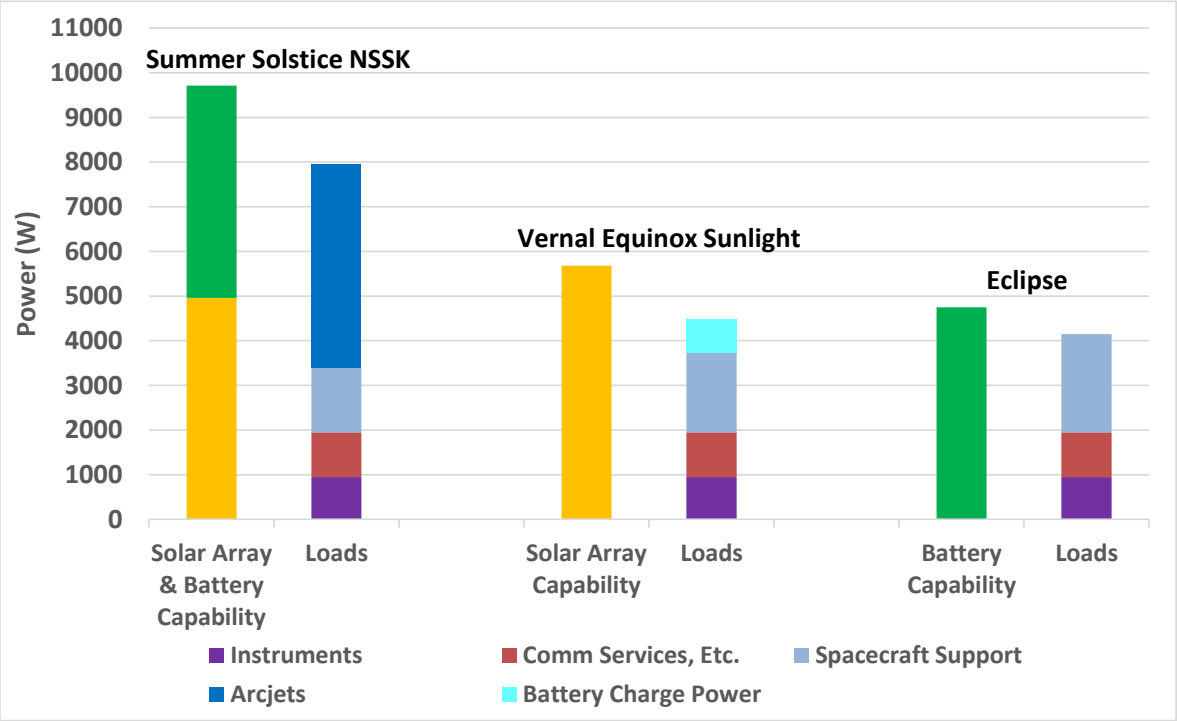

Figure 11-2. Spacecraft Power Budget

During pre-launch operations, power is applied to the Solar Array circuits by the Electrical Ground Support Equipment (EGSE). A few minutes before launch, the EGSE power is removed and the batteries provide the spacecraft power. Three-and-a-half hours after launch, the Solar Array is deployed to provide power during orbit raising. During orbit raising and geosynchronous operations, the Solar Array supplies the primary power while the batteries supply secondary power during eclipses and peak power events.

Generally, the EPS components are hot redundant at the module level within the components. For example, there are three parallel BCDs so that if one fails, the remaining two provide enough capability to adequately charge/discharge the batteries. The battery charge control in FSW uses redundant charge control methods to prevent over-charge. The EPS is designed to fly through any fault without affecting the 70V or 28V bus regulation. For those faults that require timely corrective action, the FSW monitors telemetry and takes the minimum action needed to restore long term operability. For example, if the battery voltage telemetry circuit fails, charge control based on battery voltage is disabled and control based on amp-hour state-of-charge and cell bank voltages remains active.

Solar Array

The Solar Array, shown in Figure 11-3, provides the primary power to the spacecraft and was manufactured by Lockheed Martin in Sunnyvale, California. It is comprised of 6720 ultra-triple junction (UTJ) photovoltaic cells supplied by Spectrolab. The cells are wired into 16 separate circuits each connected separately to the 70V bus in the PRU. Each circuit has 10 parallel strings of 42 cells wired in series. String isolation diodes prevent a string short from affecting the rest of the circuit. Circuit isolation diodes in the PRU prevent a circuit short from pulling down the 70V bus. At the end of the 15 year mission the Solar Array produces 4960 W at summer solstice and 5600 W at vernal equinox.

Figure 11-3. The Solar Array installed on GOES-16

The Solar Array is stowed against the spacecraft for launch. First stage deployment occurs about four hours after the spacecraft is separated from the launch vehicle in order to provide the required power for orbit raising. Once in geosynchronous orbit, the final deployment is performed.

Batteries

Two solar array batteries, as depicted in Figure 11-5, provide power when the load demand exceeds the solar array power, e.g. during eclipses. Each battery is comprised of 36 Saft VL48E lithium ion cells. Three cells are connected in parallel to form a cell bank, and 12 cell banks are connected in series to form a battery. Balancing circuits under FSW control apply current to individual cell banks to balancer their voltages. Bypass switches are used to remove a failed cell bank from the electrical path. The nominal capacity of each cell is 48 amp-hour and full charge voltage is 4.1 volt. Total energy storage of each battery is 6120 watt-hour. The battery also contains temperature sensors and heaters for thermal control. A radiator covered with optical solar reflectors (OSRs) ejects excess heat generated during discharge.

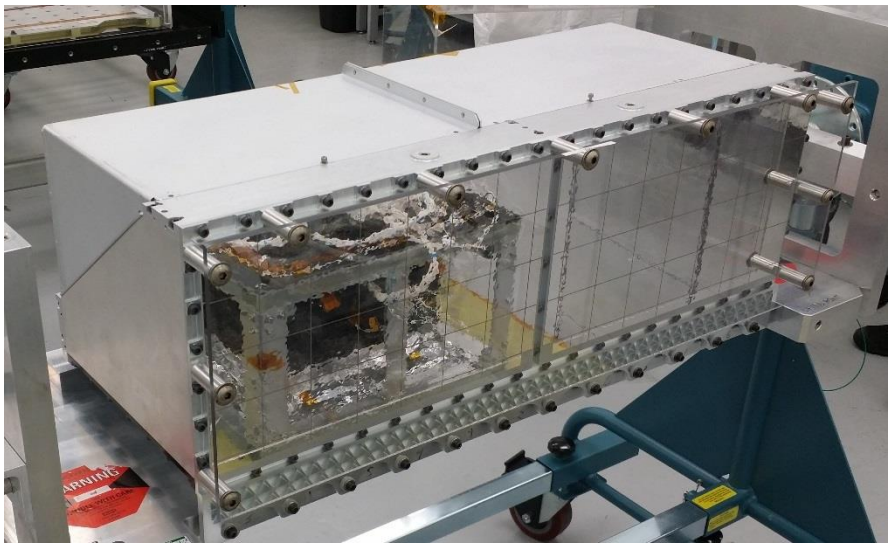

Figure 11-5: Solar Array Battery

The FSW performs the battery charge control using redundant methods to prevent over-charge in the face of any battery system failure. The primary method controls the maximum cell bank voltage. When the voltage is low a constant charge current is commanded until the voltage reaches the end of charge set point. The current is then tapered to fully charge the battery without exceeding the set point. Finally, when the taper is done, the FSW commands the balancer circuits to apply a small current to remaining cell banks until each is fully charged. Backup charge control methods use battery voltage and amp-hour state of charge (integrated battery current). The battery charge control function is depicted in Figure 11-6. The batteries were manufactured by Saft in Cockeysville, Maryland.

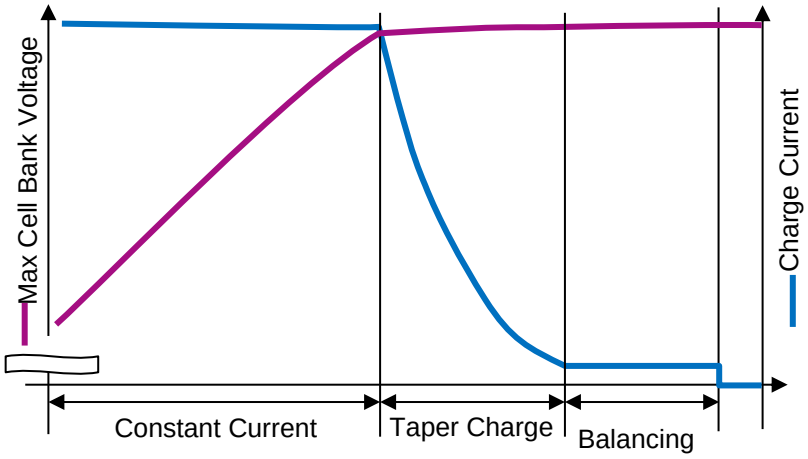

Figure 11-6. Battery Charge Control

Power Regulation Unit

The PRU, shown in Figure 11-7, regulates the flow of power from the Solar Array and batteries to spacecraft loads and instruments. It was manufactured by Lockheed Martin in Littleton, Colorado.

The PRU is comprised of the following modules:

- Central Distribution Assembly (CDA): 70V regulation electronics, command/telemetry interface via 1553 bus to the OBC, 70V load ports and current sensors
- Solar Array Shunt (SAS) modules: shunts that control the flow of solar array power onto the 70V bus in response to a control signal from the 70V regulation electronics
- BCD modules: buck/boost converters that control the flow of power to/from the batteries in response to a control signal from the 70V regulation electronics
- Low voltage Control Module (LCM): 28V regulation electronics, command/telemetry interface to the CDA, 28V load ports and current sensors
- Low voltage Power Modules (LPMs): buck converters that control the flow of 70V power onto the 28V bus in response to a control signal from the 28V regulation electronics
- Power Distribution Modules (PDMs): power feed switches for the instruments and some spacecraft loads, instrument power feed current sensors

The PRU communicates with the OBC via a 1553 data bus. The command/telemetry interface polls telemetry, including module temperatures, module on/off status, solar array currents, battery currents, and load currents. Commands include battery charge rate commands, on/off commands to each module, and on/off commands to the load switches in the PDMs.

Figure 11-7. The Power Regulation Unit

Fuse Board Assemblies (FBA)

Two FBAs provide over-current fault protection. An FBA is depicted in Figure 11-8. The 70V and 28V fuses are segregated to eliminate the risk that the two busses are shorted together.

Figure 11-8. A Fuse Board Assembly

Pyro Relay Assemblies (PRA)

Two PRAs, shown in Figure 11-9, provide fault tolerant pulses to deployment devices in response to commands from the Command & Telemetry Subsystem. Unregulated 28V power tapped from the batteries is applied to the input of each PRA. For each deployment device, a latching enable relay connects the 28V power to a non-latching fire relay that is closed by a command pulse from the C&DH. When the fire relay is closed, the 28V power is applied to the deployment device to actuate it.

Figure 11-9. The Pyro Relay Assembly

Energy Balance

The Solar Array and battery sizes were chosen to insure that the worst case battery depth-of-discharge is less than 50% of capacity and that the batteries are fully recharged at the end of any 24 hour period.. The scenario starts with a fully charged battery during sunlight operation. About 36 minutes before spacecraft midnight, the spacecraft enters eclipse and the batteries discharge to support the spacecraft load (negative battery current represents discharge, positive represents charge). At the end of the 72 minute eclipse the battery state-of-charge is at a minimum. When the spacecraft exits eclipse, solar array power supports the spacecraft loads and battery charging. At approximately 05:25 spacecraft local time an NSSK arcjet burn starts. The batteries discharge to support the resulting peak load which is greater than the solar array capability. After 40 minutes the arcjet burn ends and the batteries recharge.

This page left blank

12. Guidance Navigation & Control

The GN&C subsystem provides guidance, navigation, and attitude & articulation control for the GOES-R spacecraft. GN&C activities include determining the attitude of the spacecraft, determining the position of the spacecraft, determining the location of desired targets such as the Sun and Earth nadir, providing attitude control for rate damping from the launch vehicle separation residuals, orienting the spacecraft during cruise, communication, and science operation periods, providing for and controlling translational delta-V maneuvers and station-keeping, and managing momentum of the spacecraft. A block diagram of the GN&C Subsystem is shown in Figure 12-1.

Attitude determination is nominally accomplished using one Inertial Measurement Unit (IMU) and two Star Trackers. Two IMU's and three star trackers are included in the subsystem, which provides redundancy. Each IMU consists of four hemispheric resonating gyros (HRGs) and two accelerometers. The Star Tracker design is a wide field-of-view star tracker, which provides attitude acquisition from unknown initial conditions and provides attitude updates at up to 20 Hz in track mode. Orbit determination is provided by a global positioning system (GPS) receiver during the operational orbit. The GN&C subsystem also contains analog sun sensor assemblies, which are used for sun acquisition and contingency operations.

Attitude control is provided using reaction wheels and the propulsion system. There are six reaction wheels, and all are nominally operated simultaneously. Each wheel has a momentum storage capacity of up to 75 N-m-s. The reaction wheels serve as the primary actuators for attitude control.

The GN&C subsystem also has responsibility for control of the spacecraft's gimbals. The spacecraft design includes 2-axis gimbals for the X-band antenna, a single-axis gimbal for the solar panel, and a single-axis gimbal for the sun-pointing platform.

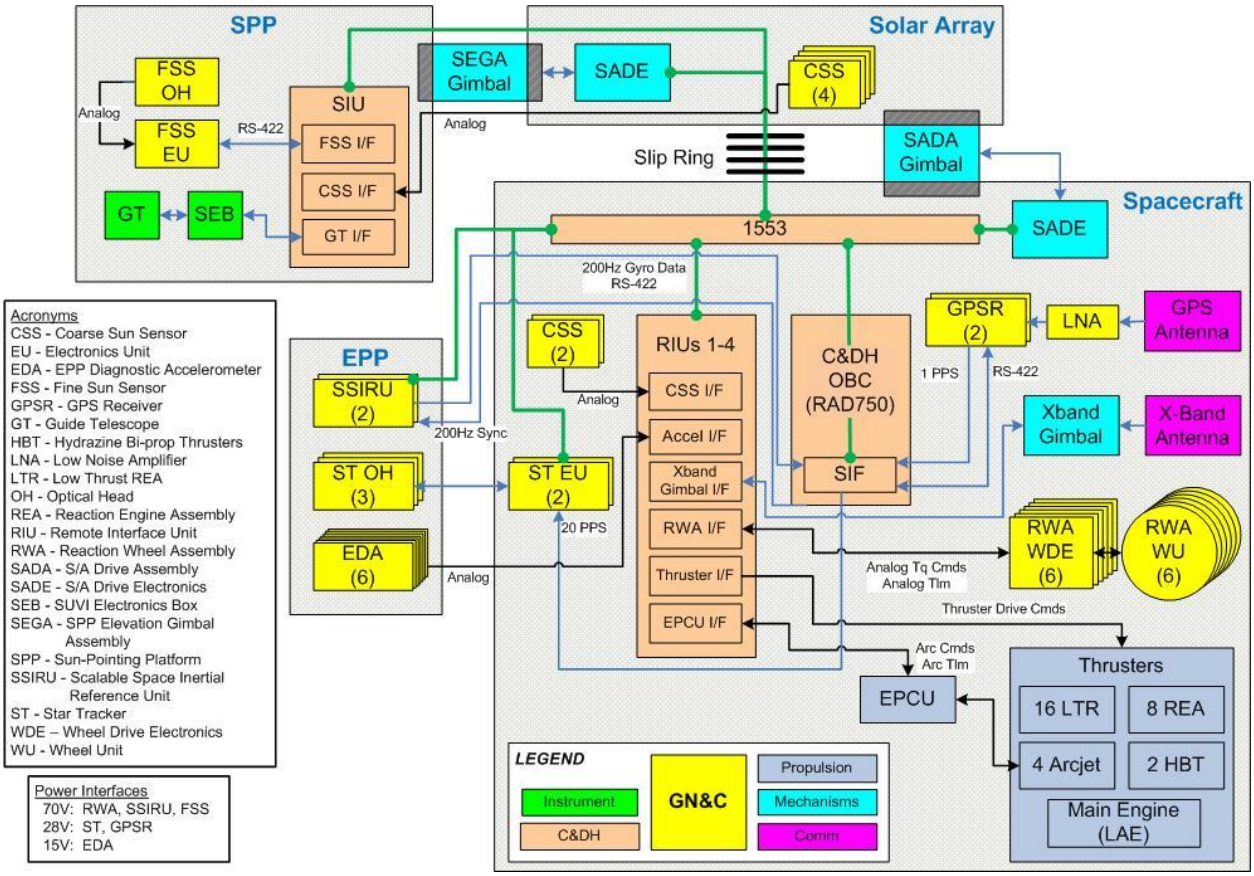

Figure 12-1. GN&C Subsystem Block Diagram

Sun Sensors

Coarse Sun Sensor Assembly (CSSA) : The GOES-R CSSA includes four analog sensor heads integrated into a single pyramid shaped mounting bracket. The CSSA provides current outputs that can be used to obtain a coarse knowledge of the sun's position. There are six Coarse Sun sensor Assemblies mounted on the GOES spacecraft and identified as A1, A2, B1, B2, C1, and C2, as shown in Figure 12-2. The six Coarse Sun Sensors Assemblies support the mission objectives of determining the position of the Sun with respect to the spacecraft and to determine the position of the Sun at all times. Four sensors are mounted on the solar array; two on the active side of the solar array, and two mounted on the backside. The other two sensors are located on a bracket mounted to the spacecraft base panel. The six CSS units are configured as two redundant systems, each system consisting of three CSS units. During eclipse, the Coarse Sun Sensors do not converge to a solution because of the sun not being in view.

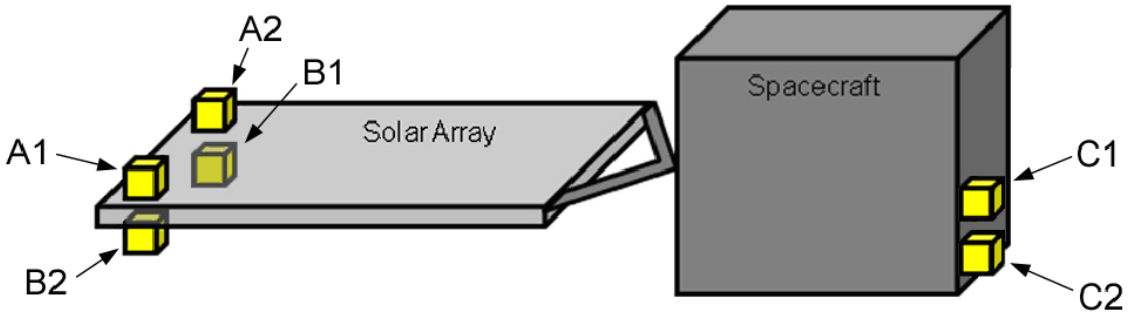

Figure 12-2. Coarse Sun Sensor Assembly Orientation

Fine Sun Sensor Assembly (FSSA): The GOES-R FSSA includes the Fine Sun Sensor Head and the Fine Sun Sensor Electronics. The FSSA supports the mission objective of determining the position of the sun with respect to the SPP, and determining the position of the sun with high accuracy. The FSSA is a backup sensor to the SUVI Guide Telescope. It is mounted on the SPP, as shown in Figure 12-3. The optical head is co-aligned with the electronics box on the side of the SPP.

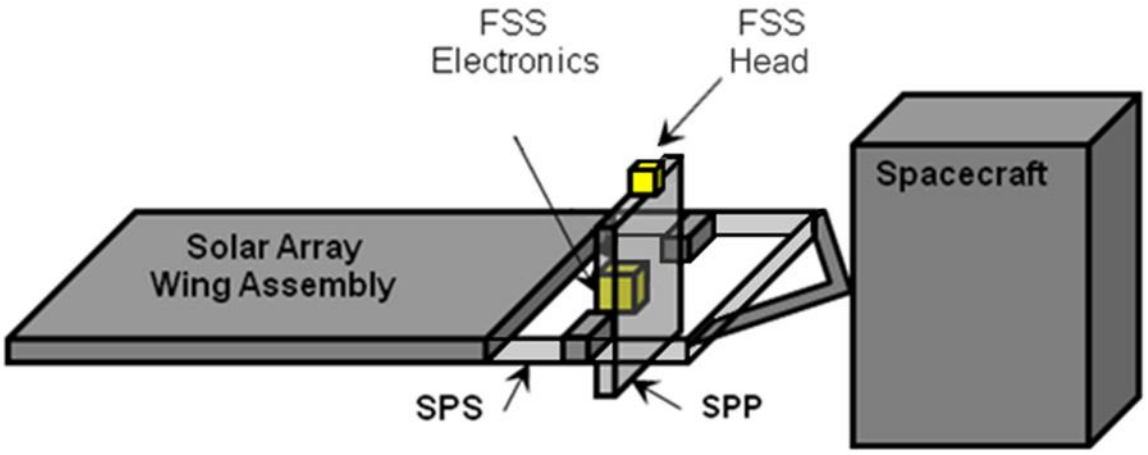

Figure 12-3. Fine Sun Sensor Assembly Mounting Location

GOES-R GN&C Performance Requirements

The increased spatial, spectral and temporal resolution of the GOES-R series Earth-observing instruments impose extremely demanding performance requirements on the spacecraft Guidance Navigation and Control (GN&C) design, including attitude knowledge, Integrated Rate Error (IRE), orbit knowledge, pointing, pointing stability, and jitter.

The GOES-R series attitude knowledge requirements are primarily driven by the instrument requirements. The spacecraft GN&C subsystem is required to provide inertial attitude knowledge to the instruments as a time-tagged attitude quaternion at 1 Hz. The spacecraft is also required to provide low-latency 3-axis attitude rate data to the ABI at 100 Hz. The ABI uses this knowledge to provide real-time control of its LOS. The ABI propagates its own attitude knowledge to achieve the GOES-R INR performance. For other instruments, the attitude knowledge information is used during the post-processing on the ground. GOES-R derives attitude and attitude rate estimates using attitude rate data from the IMU and attitude data from the star tracker. The stringent attitude knowledge requirements shown in Table 12-1 drive the spacecraft design to co-locate the Earth-observing instruments with the IMUs and star trackers on the EPP.

The spacecraft GN&C is also required to provide orbit position and velocity to the instruments at a 1 Hz rate. Position accuracy requirements are driven by pixel navigation performance, and rate accuracy requirements are driven by the need to propagate orbit position between the 1 second updates. GOES-R has an on-board Global Positioning System (GPS) receiver to provide orbit data with the specified accuracy. Because GOES-R is a geostationary satellite, this involves tracking extremely low level signals while operating above the GPS constellation.

The GOES-R series pointing and pointing stability requirements are comparable to other precision-pointing missions. However, the GOES-R requirements apply during spacecraft maintenance events, such as momentum unloads and station-keeping maneuvers. This “operate-through” capability is unique to this mission. Within the control design, there are a number of feed-forward paths to facilitate the operate-through capability. For example, the ABI instrument provides to the spacecraft predictions of the disturbance forces and torques created by ABI mirror motion for use in feed forward compensation.

Table 12-1: Summary of GN&C Requirements for Earth-Observing Instruments

Requirement	Value
Attitude Knowledge	
Static	1200 µrad 3σ per axis (prior to on-orbit calibration)
Slow Dynamic	45 µrad 3σ per axis
Dynamic	30 µrad 3σ per axis
Integrated Rate Error	
1 Sec	1 µrad 3σ X/Y axis; 1.5 µrad 3σ Z axis
30 Sec	2 µrad 3σ X/Y axis 2.5 µrad 3σ Z axis
300 Sec	7 µrad 3σ per axis
900 Sec	18.5 µrad 3σ per axis
Latency	Latency requirement curve as shown in Figure 12-1
Orbit Knowledge	
In-Track Position	75 m 3σ
Cross-Track Position	75 m 3σ
Radial Position	100 m 3σ
Velocity	6 cm/sec 3σ per axis
Pointing Accuracy	270 µrad 3σ per axis
Pointing Stability, 60 sec	224 µrad 3σ per axis
Attitude Rate Error	58.7 µrad/s 3σ per axis, based upon 15 ms latency
Availability	< 120 minutes per year of lost observation time

As discussed in the previous section, the stringent GOES-R series spacecraft attitude determination requirements dictate that the IMUs and star trackers be co-located with the Earth-observing instruments (ABI and GLM). The resulting configuration is shown in Figure 12-4, where the placement was driven by the instruments' field of regard, and the star tracker keep-out zones. GLM is a static staring instrument with no capability to compensate for alignment biases or shifts. As the GOES-R series satellites come on-orbit in the operational configuration, the GLM line-of-sight is pointed at nadir. With its scanning mirrors, ABI has the capability to compensate for any offset between the ABI and GLM lines-of-sight.

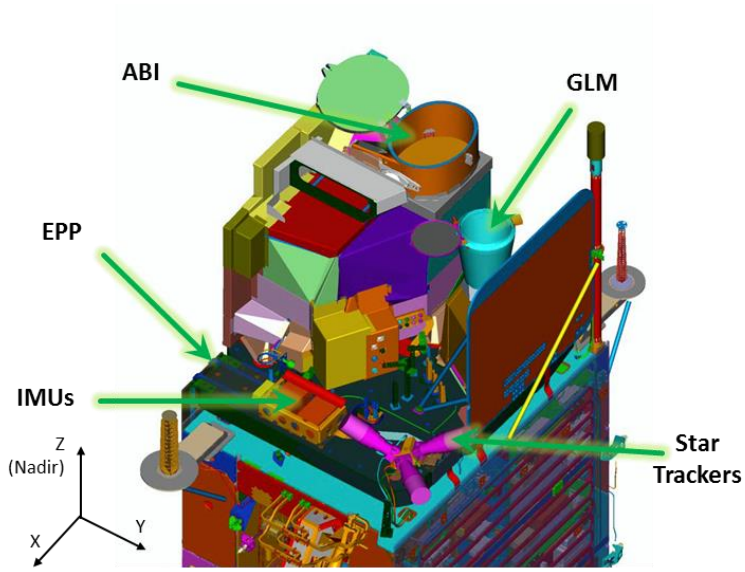

Figure 12-4. Earth Pointing Platform Configuration for the GOES-R Series Spacecraft

The “operate through” requirement for GOES-R drove the development of Aerojet Rocketdyne’s miniature 0.08 N Low Thrust REA (LTR) for use during momentum adjust (MA) maneuvers and EWSK maneuvers. The design trade for these small thrusters involved many factors, including constant and predictable low thrust, high throughput, long life, and design simplicity (the GOES-R design uses 16 of them). The small thrust from the LTRs can be balanced by torque from the reaction wheels, which allows continuous firing of the LTRs with minimal spacecraft attitude disturbance. The 0.2 Newton arcjet thrusters (also built by Aerojet Rocketdyne) are used for NSSK because of their high Isp of ~570 sec. As with the LTRs, the small thrust from the arcjets can be balanced with torque from the reaction wheels, and the attitude excursions during NSSK maneuvers remain within pointing requirements.

The gimbal design used for the azimuth and elevation control of the solar array and SPP incorporates the proven low-disturbance design first implemented on the Mars Reconnaissance Orbiter. The design is based upon a zero-backlash harmonic drive with a relatively high gear reduction of 200:1. The low disturbance capability is provided by a 2-phase brushless motor driven by a sine drive commutation, which effectively eliminates motor cogging. Additionally, a high bandwidth rate-loop is implemented on the motor rate, which essentially eliminates most of the harmonic drive friction and nonlinear effects.

Attitude Determination Performance

For attitude determination, the GOES-R series utilizes the Northrop Grumman Scalable Space Inertial Reference Unit (SSIRU) for the IMU, and the SODERN Hydra with three optical heads for the star tracker. The design includes 2 SSIRUs with 4 gyros each, but only one SSIRU is powered on at a time. The SSIRU’s 4 gyros are sampled at 200 Hz, and the star tracker optical heads are

sampled at 20 Hz. Two samples of 4-gyro data are collected, filtered, bias-corrected, and converted to 3-axis rate data before sending to the ABI at 100 Hz. Attitude estimation is performed using a kinematic 6-state extended Kalman filter, which combines quaternion outputs from the star tracker with angular rate measurements from the SSIRU to produce a 3-state attitude error estimate and 3-state gyro bias error estimate.

As with previous GOES satellites, accurate attitude and rate estimates are critical to INR requirements as they are used in the ground-based motion compensation. For the GOES-R series, rate estimates are also used for real-time ABI mirror control to steer out jitter up to the first instrument mode. In the GOES-R series, attitude determination implementation, star tracker measurements and SSIRU measurements are synchronized with the spacecraft control frame to provide the most accurate attitude estimate possible.

The SSIRU plays a key role in meeting the GOES-R series INR requirements. High bandwidth, low-latency rate measurements are critical for accurate motion compensation and real-time mirror control for the ABI instrument. The IRE requirements specify how much error can be accumulated when integrating measured gyro rates. As shown in Table 12-1, IRE requirements are specified over different time windows from 1 to 900 seconds. The 1 second window is completely driven by gyro performance, particularly angle white noise. The other windows are driven by a combination of gyro performance, Kalman filter bias estimation, and stability of the mounting interface. The SSIRU was selected for the GOES-R series because of the high bandwidth and low latency of the RS-422 gyro data output, as well as the low-noise characteristics of the four hemispherical resonator gyros.

The three-head SODERN Hydra Star Tracker is used for attitude measurements, with two heads operating continuously and one serving as a cold spare. The Hydra design provides the capability to synchronize each star measurement with an externally provided 20 Hz reference signal. Star measurements from the multiple heads are combined within the star tracker software. Each head can track up to 15 stars at 20 Hz.

The IRE requirements are the most unique AD performance requirements for GOES-R. To establish the performance characteristics of the gyros, 24 hours of 200 Hz data from the gyros were collected with the GOES-R series SSIRU mounted to a granite block. Analysis of the gyro data was performed to estimate the angle white noise, angle random walk, and rate random walk parameters for each gyro. The SSIRU model in the AD simulation was configured with these model parameters, and the attitude and attitude rate profiles discussed above were used as inputs to the AD simulation. IRE performance requirements were met with considerable margin for the GOES-R series SSIRU.

Orbit Determination Performance

A key part of the GN&C component suite for the GOES-R series is the upgraded Viceroy GPS Receiver (GPSR) from General Dynamics coupled with a GPS antenna designed by Lockheed Martin. The Viceroy-4 was developed specifically for the GOES-R series program. The antenna design is tailored for operations in a GEO. The new GPSR design and custom GEO antenna

design enable onboard autonomous navigation, which is a critical enabling technology for this mission.

A GPS receiver at GEO altitude (~35,786 km) is 15,000 km farther away from Earth than the GPS constellation. Satellites comprising the GPS constellation are designed to transmit signals towards Earth. Therefore, a GEO spacecraft such as those in the GOES-R series must have its GPS receive antenna nadir pointing in order to receive the GPS signals that leak around the Earth, as shown below in Figure 12-5.

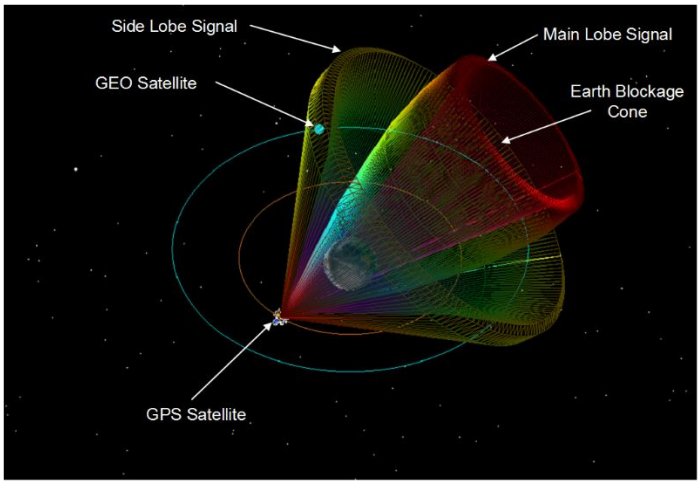

Figure 12-5. GPS Signal as Seen by a Geostationary Satellite

A GPS receiver performs optimally when it tracks 4 or more GPS satellites. Analysis shows that this cannot be achieved at GEO when only the GPS main lobe signals are used. Because GPS side lobe signals are inherently weak, and because free space path loss at GEO is up to 10 dB compared with low-Earth orbit, tracking GPS side lobes is extremely challenging.

Only main-lobe signal power is specified in the GPS system specification. The antenna designers for the various GPS vehicles (Block II, IIA, IIR, IIRM, and IIF) have chosen slightly different methods of meeting main-lobe power requirements. As a result, the side-lobe characteristics vary depending upon the specific GPS satellite in view, as illustrated in Figure 12-6. A GPS receiver attempting to exploit side lobe information must have the dynamic range to distinguish a low power signal from noise while not saturating when a high power signal is present. This characteristic of the GPS constellation makes analysis of GEO receiver availability particularly difficult.

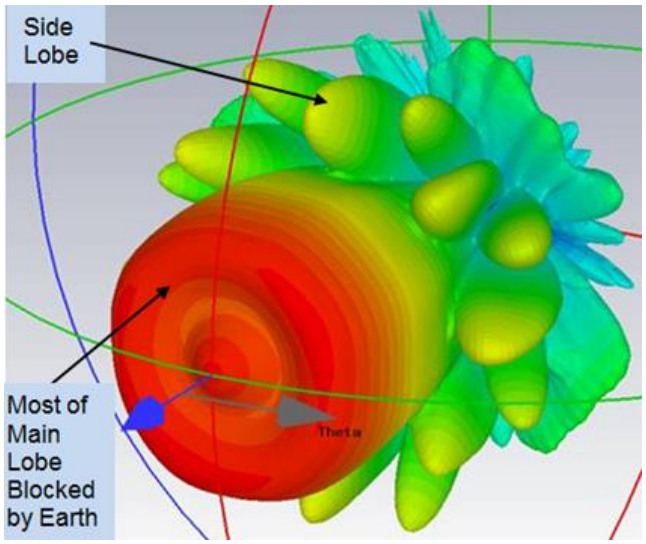

Figure 12-6. GPS Transmit Antenna Pattern in 3D Illustrating Side Lobe Structure Detail

The time to initialize upon power up is a good indicator of the performance capability of a GPSR. The GOES-R GPSR acquires a position fix within eight minutes for more than 95% of the cases.

Once acquisition is attained, the Viceroy-4 outputs the spacecraft position and velocity in the Earth-Centered Earth-Fixed (ECEF) reference frame at 1 Hz. The GPSR-provided ECEF position and velocity are converted to the International Celestial Reference Frame (ICRF) by the GOES-R series onboard software. The ICRF position and velocity are converted to equinoctial elements, which are used to propagate the orbit at 20 Hz and to provide the nadir and orbit normal vectors needed by the attitude control system.

Pointing Control and Stability Performance

The disturbances affecting low frequency pointing performance include solar array articulation, ABI scan mirror disturbances, and RWA friction, gyroscopic, and zero crossing disturbances. In addition to these common disturbances, momentum adjust cases also include LTR thruster disturbances (torque and thrust variation). Because many of these disturbances are deterministic and predictable, GOES-R series FSW uses feed forward capabilities to improve pointing stability. The gimbal articulation controller uses spacecraft body rate estimates as a feedforward term to steer out spacecraft body motion for the sun pointed instruments.

For the Earth-observing instruments, ABI scan mirror disturbances are mitigated through feedforward of the ABI PIFT data from the instrument. Torques produced by the LTRs and arcjets are predicted and fed forward as compensation for those disturbances. Gyroscopic torques due to the spinning RWAs are also fed forward through the attitude controller. Along with feedforward prediction algorithms, RWA friction and zero crossing disturbances are mitigated by the implementation of a wheel speed controller, which acts on the error between the commanded speed and the actual wheel speed estimate.

This page left blank

13. Propulsion Subsystem

The GOES-R series propulsion system provides the means for reaction wheel momentum management, attitude control, station-keeping, relocation, decommissioning, and the velocity change at apogee required for final injection into geostationary orbit. The propulsion system schematic is shown below in Figure 13-1.

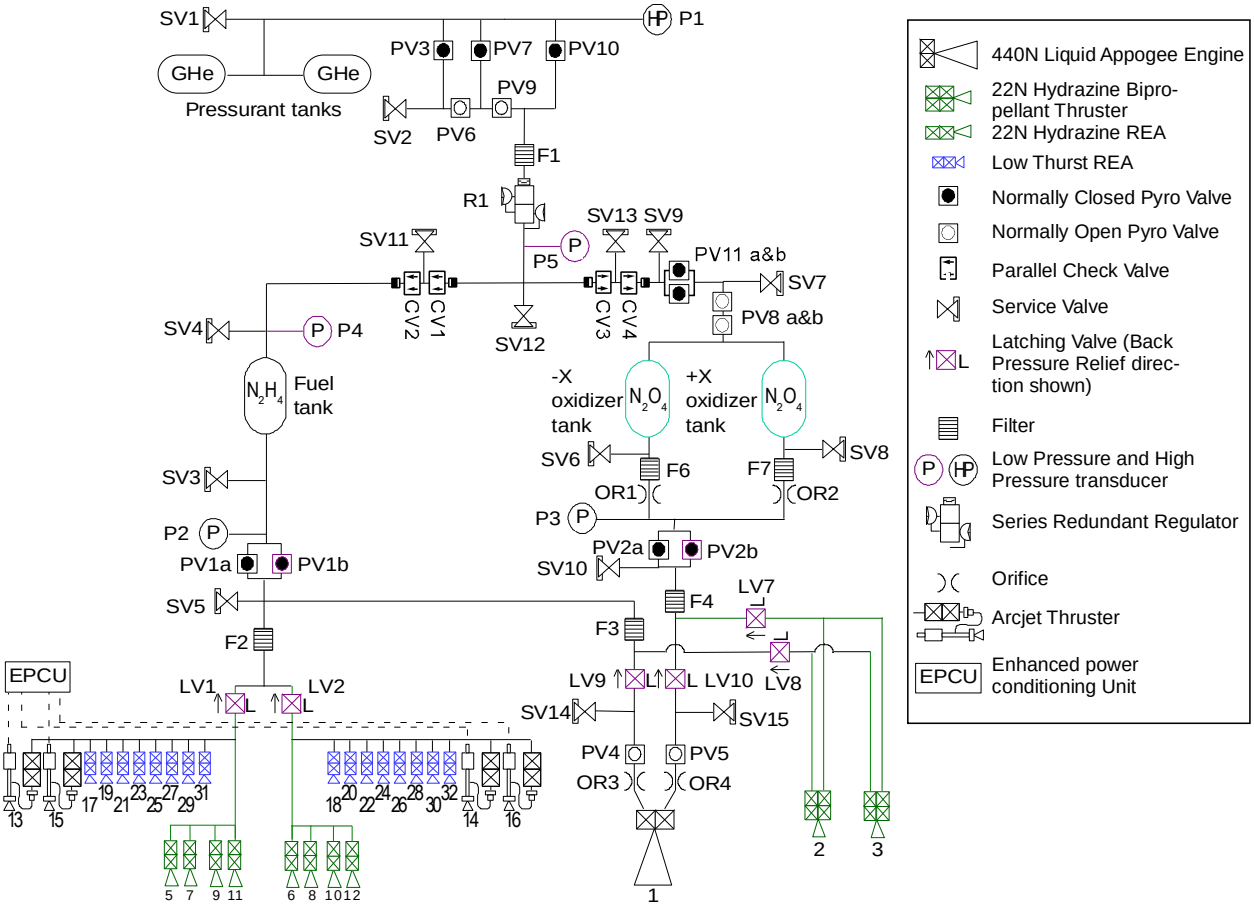

Figure 13-1. GOES-R Series Propulsion System Schematic

It is a dual mode storable propellant propulsion system derived from the Lockheed Martin Space Systems Company A2100 AX-class design. The delta-v at apogee is provided by a high performance 450 N (101 lbf) hypergolic Liquid Apogee Engine (LAE) using hydrazine as a fuel and MON-3 as an oxidizer. Two 22 N (5 lbf) hypergolic hydrazine bipropellant thrusters (HBTs) are used for relocation, decommissioning, and as a backup to the LAE and use the same propellants as the LAE. Eight 22 N (5 lbf) monopropellant hydrazine reaction engine assemblies (REAs), configured in half systems, are used for settling burns prior to LAE ignition, attitude control during LAE firings, and relocations. Sixteen 90 mN (20 mlbf) monopropellant hydrazine LTRs, configured in half systems, are used for momentum management and station-keeping. Four 225 mN (50 mlbf) arcjets are used for station-keeping. The low thrust, highly predictable, stable

performance of the LTRs and arcjets allows the payload to operate through thruster use. Pictures of the thrusters are shown in Figure 13-2.

Figure 13-2. GOES-R Series Spacecraft Thrusters

The propellants are stored in two cylindrical titanium alloy oxidizer tanks and one cylindrical graphite reinforced titanium alloy fuel tank, shown in Figure 13-3.

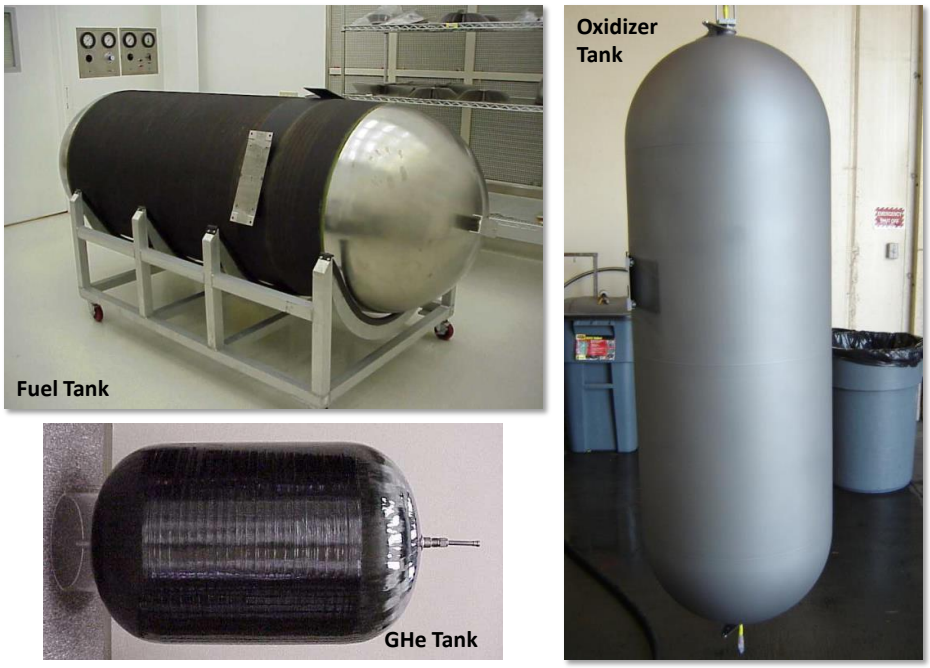

Figure 13-3. GOES-R Series Spacecraft Propellant and Pressurant Tanks

All three propellant tanks include internal propellant management devices (PMDs) to control the location of propellant in the zero-gravity space environment and to ensure gas-free propellants are supplied to all thrusters over the operational life of the spacecraft. The propellant tanks are

pressurized by gaseous helium (GHe), supplied from two cylindrical lightweight titanium alloy graphite over-wrapped pressurant tanks. Check valves upstream of the propellant tank prevent migration of propellant vapors into the pressurant system. A pressure regulator maintains constant propellant tank pressure throughout transfer orbit for consistent LAE operation. Once the spacecraft has achieved geostationary orbit, the LAE, oxidizer tank, and GHe tank are isolated by firing pyrovalves closed and the system operates in blowdown for the remainder of its operational life.

One additional set of a normally open and a normally closed pyrovalves allows for a mid-life repressurization of the fuel tank. Latch valves provide an inhibitor against propellant release on the ground and allow for isolation of a half system of thrusters on orbit. In-line filters in both the GHe and propellant systems protect against contamination, ensuring clean propellant to the thrusters. Pressure transducers provide pressure telemetry at several points in the system throughout operational life. Fill and drain service valves provide the means for loading propellants and pressurant into the propulsion system. They are also used as test ports and can be used for offloading propellant, if necessary. Various propulsion system components are shown in Figure 13-4.

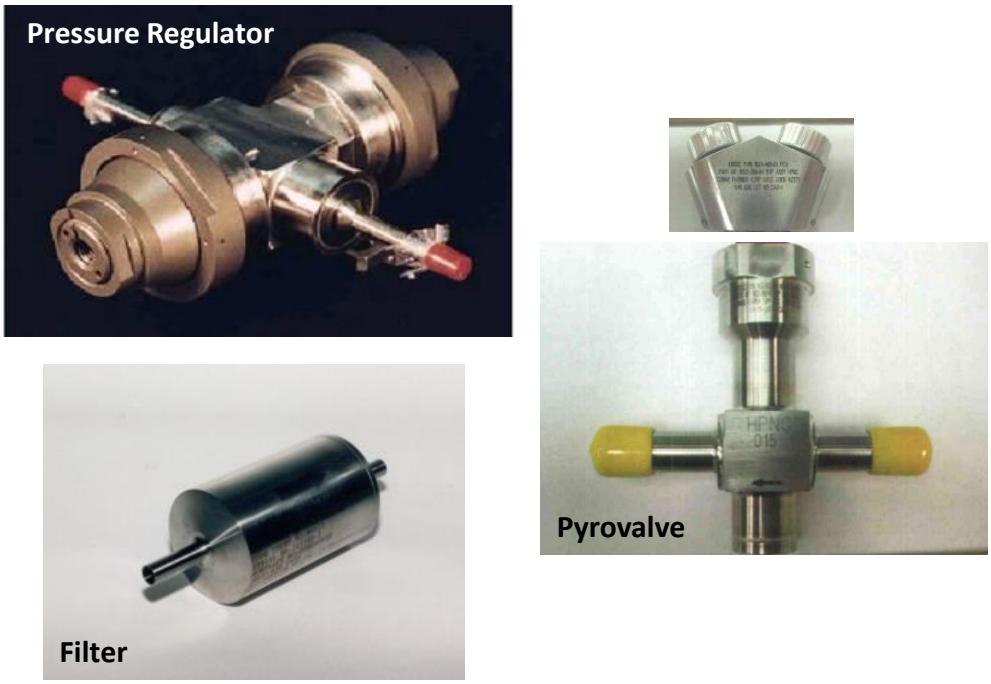

Figure 13-4. GOES-R Propulsion System Components

This page left blank

14. Thermal Control Subsystem

The GOES-R series spacecraft thermal control subsystem is designed to ensure that thermal requirements are met for all mission phases from launch to end of life. The GOES-R spacecraft uses Lockheed Martin A2100 heritage techniques such as heat pipes, mirrors, MLI blankets, and heaters to accommodate variations in spacecraft configuration, environmental heat loads, and degradation of materials to meet these requirements. The thermal features of GOES-R are shown in Figure 14-1 for the deployed operational configuration and Figure 14-2 for the stowed orbit raising configuration. The +Z axis is Earth facing and the solar array is pointed south and tracks the sun during the operational mission phase.

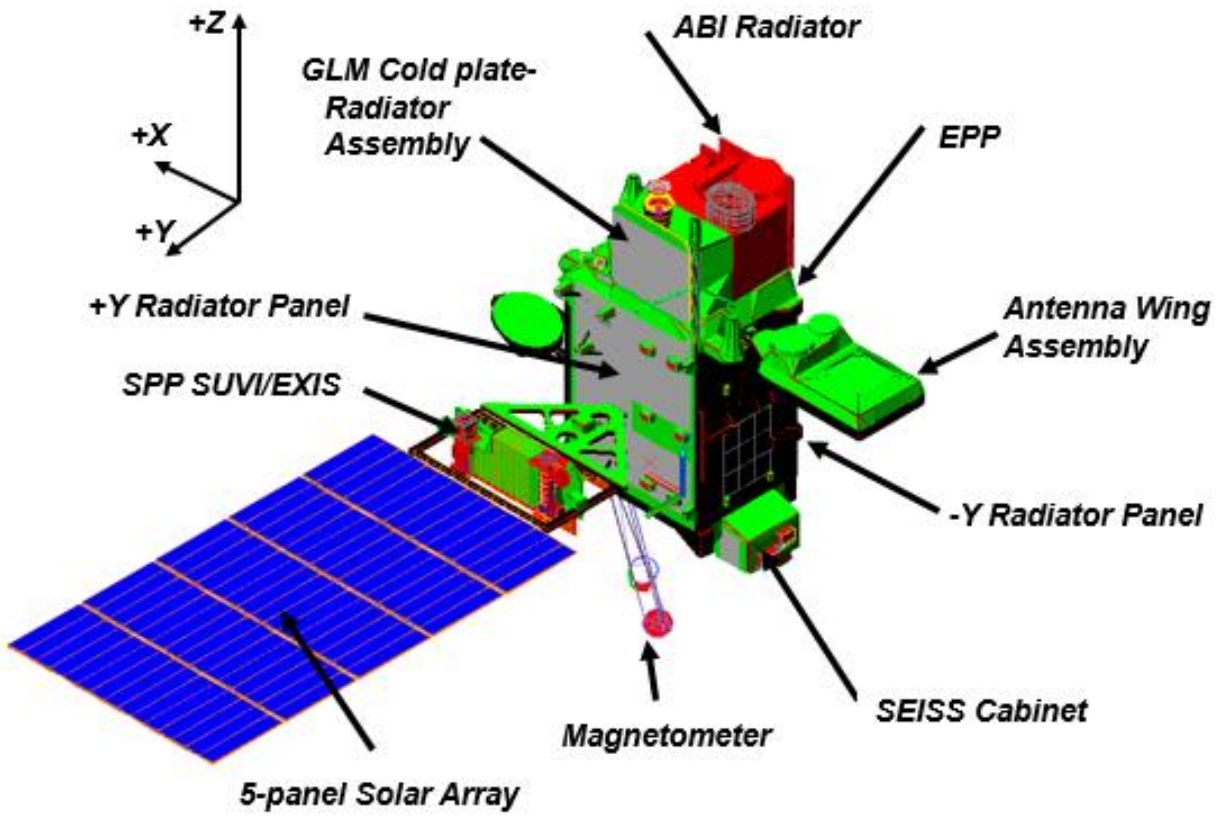

Figure 14-1. GOES-R Series Thermal Control Features (Deployed Configuration)

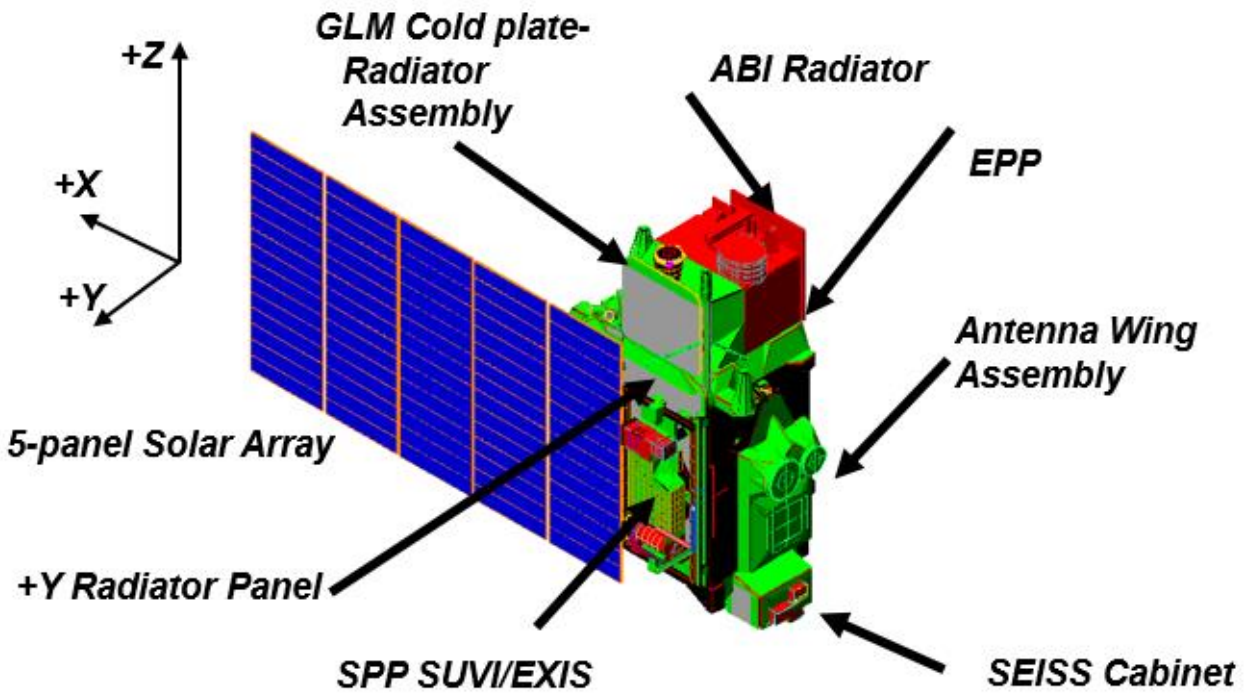

Figure 14-2. GOES-R Thermal Control Features

Passive thermal control features include external and internal thermal materials and hardware. To aid the transfer of waste heat to radiators the design uses heat pipes, wet mounting of components, and high emissivity coatings. To reduce the flow of heat where needed, the design uses MLI blankets, low emissivity coatings, and low conductivity stand-offs. Radiation panels are embedded with ammonia-filled heat pipes to enhance the heat spreading throughout the panel and serve to lower hot spots and improve heat rejection into space. Radiators are covered with optical solar reflectors (OSRs), a high emissivity/low absorptivity material, to reject sunlight and emit heat to space. Portions of the panels are covered in MLI to reduce heater power consumption while maintaining internal temperatures on-orbit.

There are two types of regulated heater circuits designed for the GOES-R series: (1) mechanical-thermostat controlled circuits; and (2) OBC-controlled circuits. Mechanical-thermostats are used for controlling heaters intended for short durations during the early part of the mission. For example, on deployment mechanism rate dampers for the solar array and antenna shelf. These circuits have fixed-temperature-set-points and are usually enabled just prior to deployment. The instruments also use mechanical-thermostats for survival heater control. OBC-controlled circuits are used during all mission phases where heater control is required; storage, transfer orbit, and on-orbit mission phases. These circuits have software defined control characteristics and use feedback sensing from thermistors for control. Control algorithms include MAX/MIN logic, or the heater can be controlled using a straight duty-cycle. All heater control parameters may be adjusted at any point during the mission as long as a command link is available. All heaters are fully redundant, except for the Magnetometer heaters.

Finally, both types of heater circuits can be manually overridden to force them on or off as desired and are also protected by a fault management system. Most of the spacecraft heaters are magnetically compensated heaters, which are designed to meet the low magnetic dipole requirements of the Magnetometer sensors.

Equipment panel radiators are oriented to face +Y/-Y ("north" and "south" panels) sides to reduce direct solar heating and be better thermally controlled. Many of the instruments have a SU that is mounted external to the spacecraft and an EU that is mounted to the inside of the spacecraft on the radiator panels. Both EUs and other electronic boxes take advantage of the thermally controlled panels. Other components mounted to the panels include RWAs, the OBC, and a variety of communication hardware like traveling wave tube assemblies (TWTAs). When higher conductivity between a box and the panel is required, components are wet mounted with a high thermally conductive adhesive bond. When a conduction enhancement is not necessary, components are dry mounted to the panels. Base plates may be treated with irridite for electrical conductivity. Most units and some internal panels are painted black to maximize radiation heat transfer internally to the radiator panels as well as help create an isothermal environment inside.

The +X and –X sides of the spacecraft are blanketed with MLI. MLI blankets help minimize the diurnal temperature swing experienced from eclipse and maintain the spacecraft cavity within acceptable temperatures, where many of the propulsion components are mounted. The LAE is mounted to the base (-Z) side of the spacecraft and has a heat shield to protect surrounding hardware from extreme temperatures during firings for transfer orbit maneuvers.

The antenna wing assembly (AWA) is mounted on the –X side and faces in the +Z direction after deployment. An array of horns are mounted to the antenna wing and all are covered with RF transparent sunshield blankets to protect the horns from direct solar light. There is also a gimbal controlled X-band reflector, mounted on the +X side of the spacecraft which is blanketed as well.

Magnetometer sensors are mounted on a deployable boom mounted to the +X side of the spacecraft that is deployed once in GEO orbit. Each sensor unit has a heater and is covered in MLI blankets to maintain temperatures.

GOES-R series batteries take advantage of many thermal control strategies to stay within thermal requirement temperatures. To provide redundant thermistors the set up ensures two thermistors in each of the six heater zones on each battery. Each zone is heater controlled separately to evenly heat the battery as needed. The batteries are mounted to the bottom deck on the –Y side and are completely isolated from the rest of the spacecraft. Dedicated radiators facing –Y direction are required in order to dissipate heat from the batteries. Areas not covered with MLI are shown in gray in Figure 14-3.

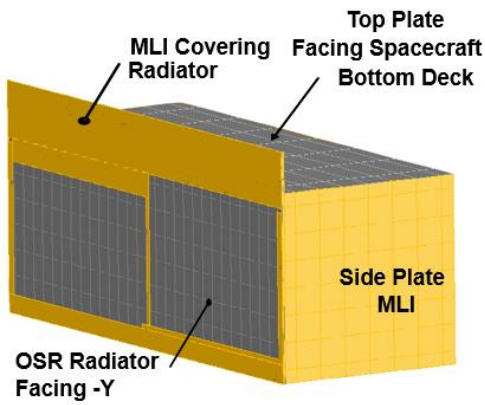

Figure 14-3. Electrical Power Subsystem Architecture

SEISS Cabinet

The SEISS cabinet is mounted to the –X side of the spacecraft as a stand-alone thermal-structural assembly with embedded heat pipes. All instruments are coupled to the two radiators on the +/–Y sides of the cabinet via a thermal wet mount. MLI is used to cover the rest of the cabinet as well as the instruments themselves. Heaters and control thermistors are used on the cabinet heat pipes to maintain minimum temperatures. Both MLI and radiator panels are shown below in Figure 14-4.

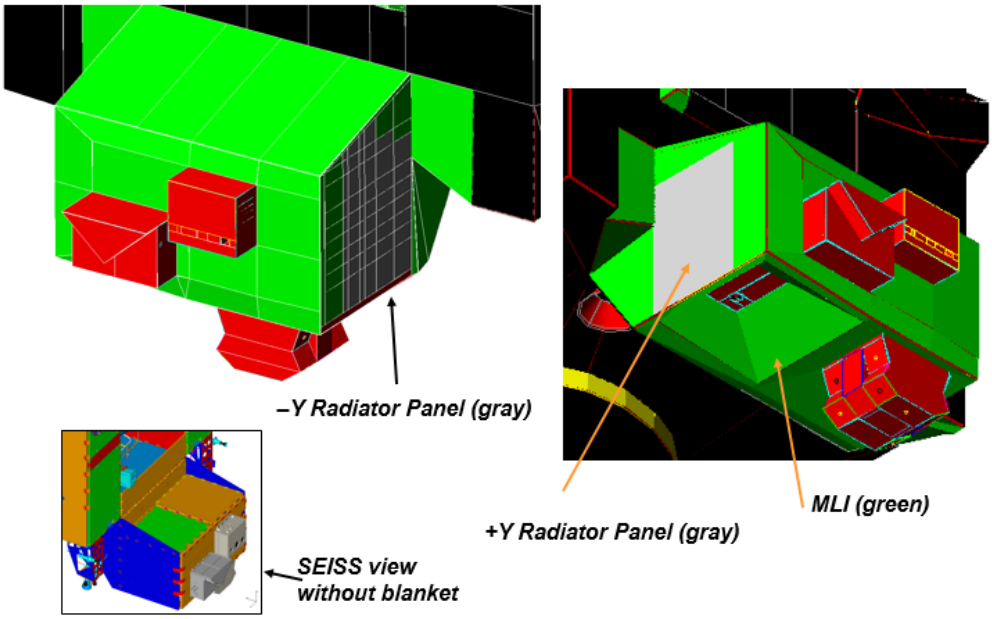

Figure 14-4. SEISS Cabinet and Sensors

Earth Pointing Platform

The Earth Pointing Platform is mounted on top of the nadir deck. The EPP is attached to the nadir deck via four launch lock assemblies that mechanically isolate the EPP from the rest of the spacecraft. The EPP is the mounting location for two of the GOES-R instruments, shown in Figure 14-5.

GLM and ABI are both conductively isolated from the EPP via titanium mounting feet. Both instrument SUs are covered with thermal blankets to insulate the instrument from the EPP, other instruments, and space. MLI blankets are used to reduce thermal distortion in the form of diurnal swings and temperature gradients. ABI has a dedicated radiator provided with the instrument which it is attached via LHPs. To accommodate the GLM an isolated, free standing aluminum honeycomb radiator panel with embedded heat pipes was designed with heater control. GLM is attached to the radiator by both LHPs and thermal straps. Both ABI and GLM have associated EUs that are mounted inside the spacecraft on the–Y equipment panel. To meet instrument pointing requirements the star tracker is thermally controlled with a separate radiator, heat straps, and heaters. To keep the scalable SSIRUs within temperature requirements they are mounted to a dedicated heat pipe cold plate-radiator assembly.

In order to prevent excessive environmental heating due to solar entrapment, the volume of space between ABI and GLM is closed out with a sunshield membrane.

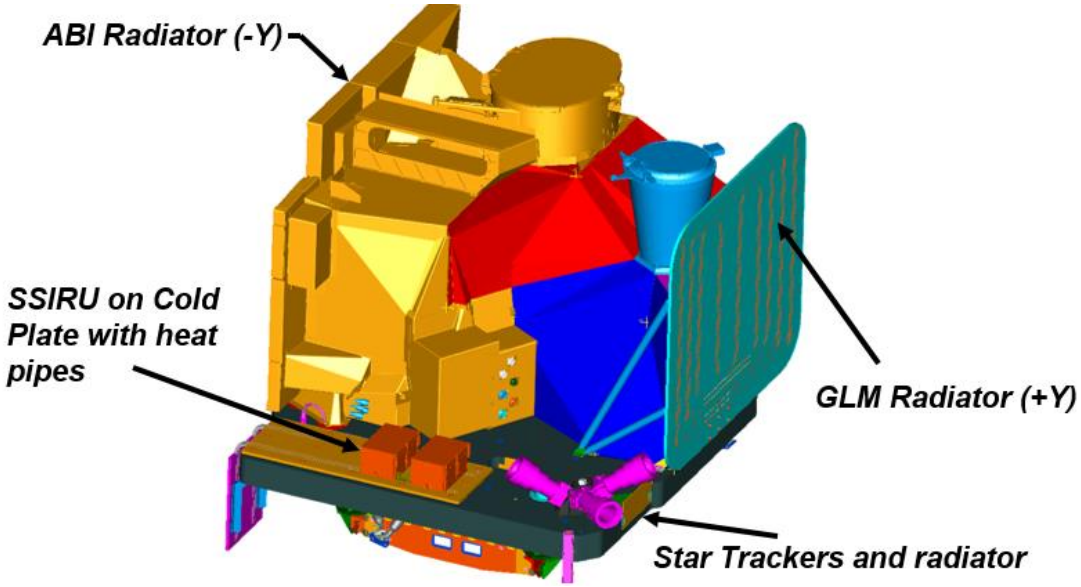

Figure 14-5. EPP and Instruments

Solar Array Wing Assembly

The SAWA is shown below in Figure 14-6. The SPP, unique to the GOES-R series, holds SUVI and EXIS on the solar wing. Both instruments must face the sun at all times which is done via two motor driven gimbals, the SEGA and SADA. In addition, the SEB and the SIU of the sun pointing

subsystem are mounted to the SPP. The back of the SPP is a black painted radiator to help emit heat dissipation from the SEB and SIU. MLI blankets wrap around the individual instruments as well as the spacecraft components mounted on the panel between them. The solar array yoke is also blanketed on the sun-facing side with MLI. Both gimbals are also covered with MLI except at the rotation interfaces and are equipped with heaters.

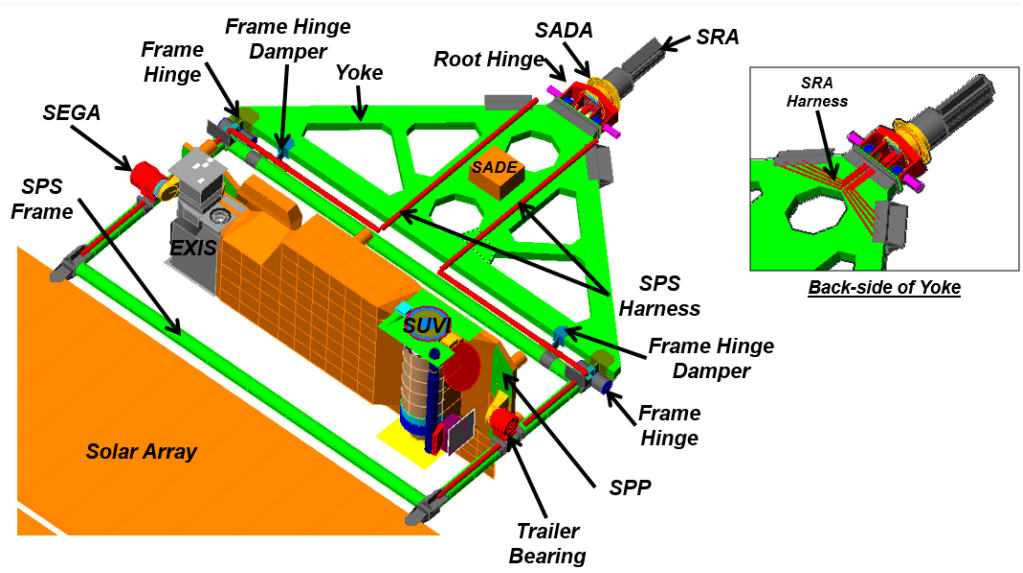

Figure 14-6. Solar Array Wing Assembly and Sun Pointing Platform

15. Mechanisms

The GOES-R series satellites have five appendages that must be stowed and restrained for launch and later deployed at different stages of the mission. These appendages are listed below:

- Solar Wing Subsystem (SWS) and Sun Pointing Platform (SPP)
- Antenna Wing Assembly (AWA)
- X-band Reflector Antenna (X-Band)
- Magnetometer Boom (Mag Boom)
- Earth Pointing Platform

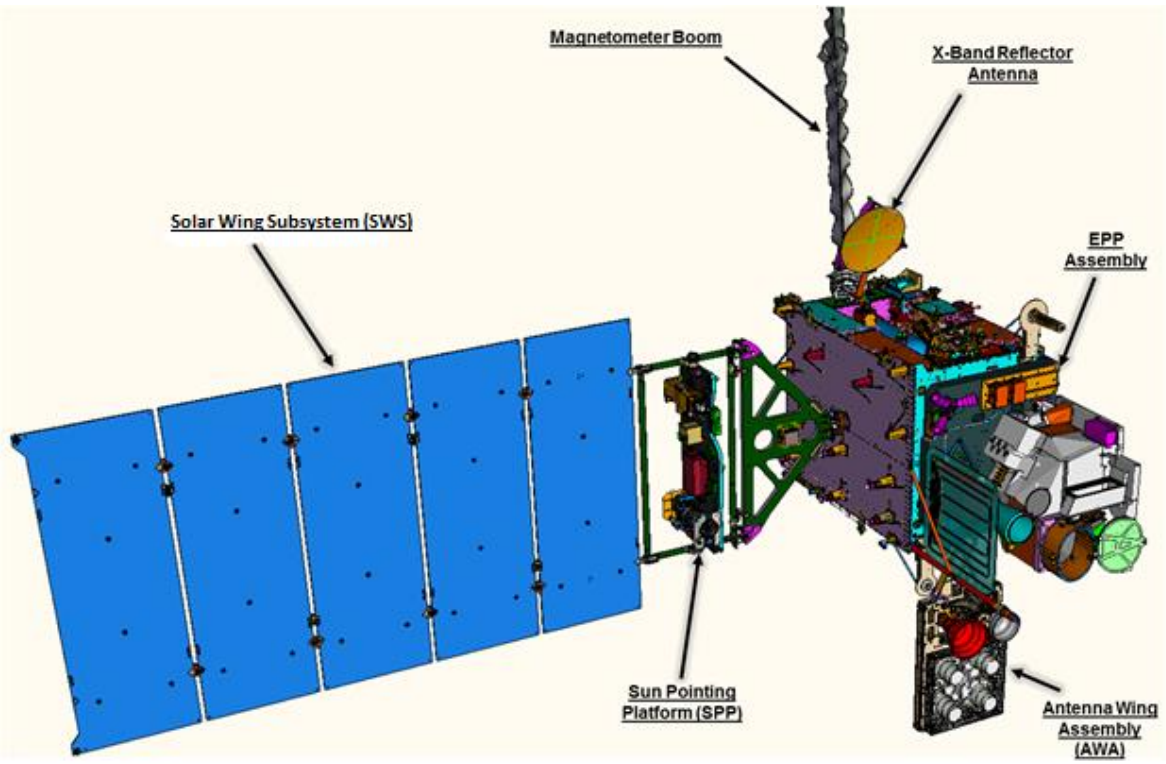

Figure 15-1. GOES-R Series Deployable Structures

Various mechanisms are needed in order to restrain, deploy and position the GOES-R series appendages. These mechanisms are discussed briefly below.

Restraint Mechanisms

A shear tie is a mechanism that restraints a deployable structure while it also reacts to external loads resulting from transportation of the spacecraft and loads resulting from the launch environment. A shear tie assembly is composed of two main sub-assemblies; the actuator and the retraction mechanism. The actuator secures the bolt or cable that keeps the deployable in a

preloaded and secured state. Once the actuator is commanded to release, the retraction mechanism ensures that the cable or bolt securing the deployable is retracted out of the way to allow the deployment. Figure 15.2 is representative of the shear ties used to secure the GOES-R series appendages.

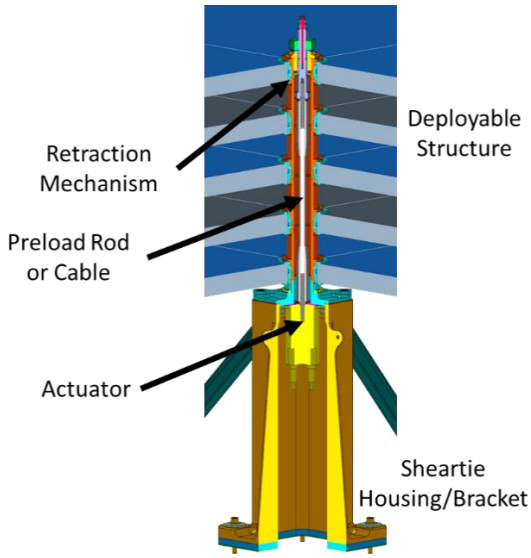

Figure 15-2. Example of Solar Array Shear Tie

The GOES-R series use different kind of shear tie actuators depending on the application and preload required to secure the deployable assembly. All shear tie actuators are fully redundant as they contain independent primary and secondary circuits for release.

The different kind of restraint and release actuators are:

- Frangibolts: made by TiNi Aerospace Inc.
    - Used on the SWS frame shear ties, X-band antenna and AWA shear ties
- Separation Nuts (Sep Nuts): made by Eaton
    - Used on the Solar Array Panel shear ties
- Split Spool Release Device (SSRD): made by NEA Electronics
    - Used on the SPP shear ties

Deployment and Positioning Mechanisms

The deployment and movement of the GOES-R series appendages is achieved by the use of passive hinges, gimbal actuators and stepper motor drives.

Hinges

The hinges are used during one time deployments and their rotation is controlled using thermally controlled viscous dampers. These viscous dampers can be integral to the hinge as is the case of the Root Hinge (used in the SWS) or the HA-90 Hinge (used on the AWA), as shown in Figure

15-4. Also, the dampers can be a separate sub-assembly as is the case of the Solar Array inter-panel hinges and the SPS frame hinges, as shown in Figure 15-3.

The hinge assemblies for the GOES-R series contain redundant springs for uniform torque application throughout the deployment, hard stops and latches for stiff lockout of the deployable assembly once it reaches its final position.

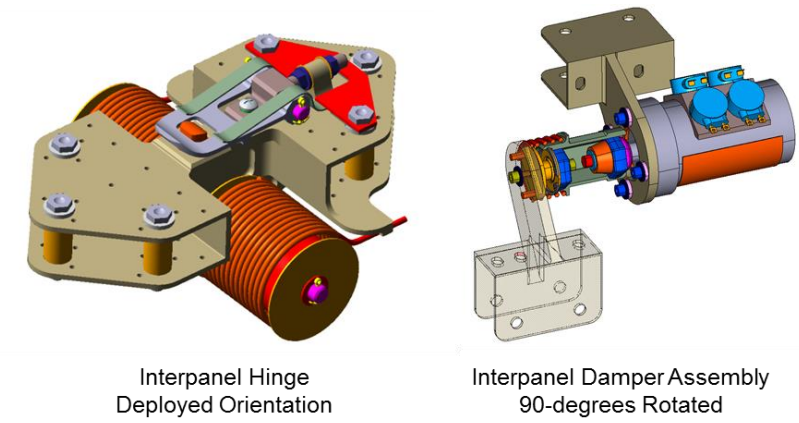

Figure 15-3. Solar Array Inter Panel and SPP Frame Hinge and Damper

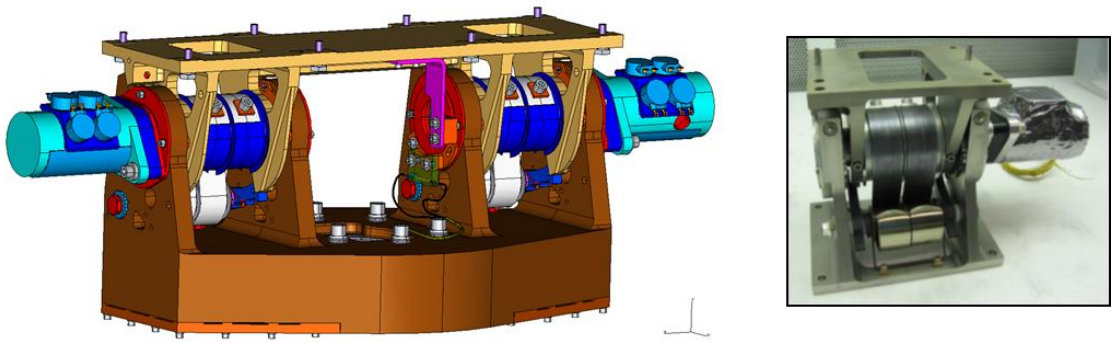

Figure 15-4. SWS Root Hinge (left), AWA HA-90 Hinge (right)

Gimbal

The gimbal (shown in Figure 15-5) is a dual axis actuator that allows the X-band reflector to be repositioned on orbit as required. The gimbal contains two stepper motors mounted orthogonally that provide .003°/step resolution for each axis. The gimbal contains redundant course and fine potentiometers for reflector position telemetry.

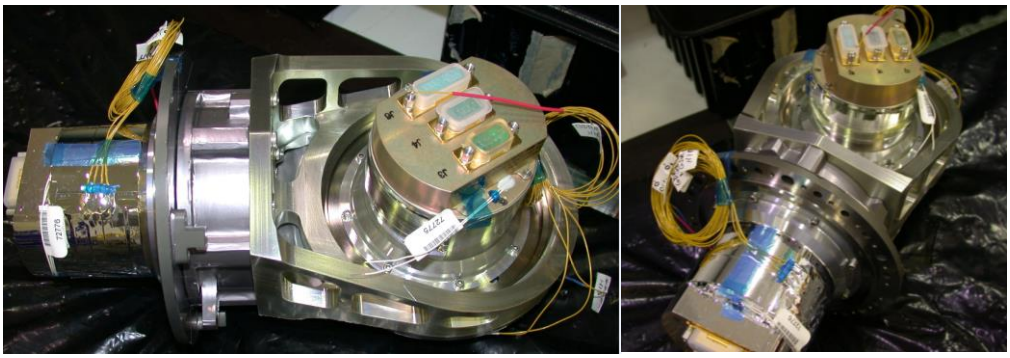

Figure 15-5. Dual Axis Gimbal Assembly

Solar Array Drive/ Slip Ring Assembly (SADA/SRA)

The SADA/SRA (shown in Figure 15-6) is composed of the Solar Array Drive Assembly-the Slip Ring Assembly. The SADA allows the Solar Array Wing (SWS) to rotate 360° (in both positive and negative directions) while tracking the sun. The Slip Ring Assembly (SRA) allows power to be transferred from the Solar Array back into the spacecraft thru a rotating interface. The SADA contains redundant motors and resolver circuits. The SADA is driven via software and by the SADE (Solar Array Drive Electronics Box).

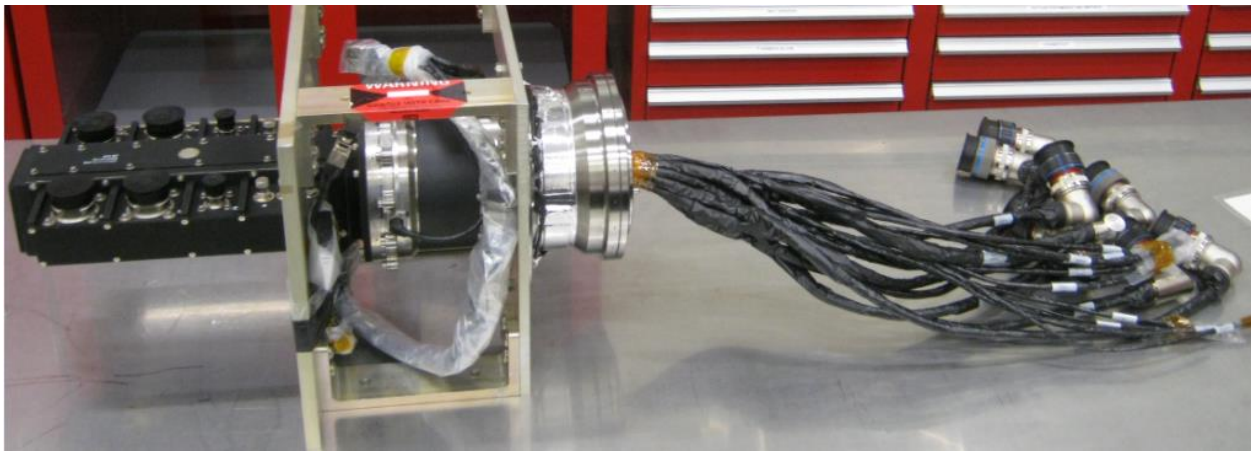

Figure 15-6. Solar Array Drive/Slip Ring Harness Assembly

Sun-Pointing Platform Elevation Gimbal Assembly (SEGA) and Trailer Bearing Assembly (TBA)

The SEGA gimbal works in conjunction with the Trailer Bearing Assembly (TBA) to point the SPP which contains the GOES solar instruments, as depicted in Figure 15-7. This pointing ability provides seasonal position/offsets for the instruments on the SPP as well as the ability to perform calibration scans which are driven by the instruments. The SEGA is a single axis motor with an attached drive train that provides enough torque to move the SPP. The TBA which is located at the opposite end of the SPP rotation line provides a low friction support to the SPP and allows the SEGA to rotate the SPP with high precision.

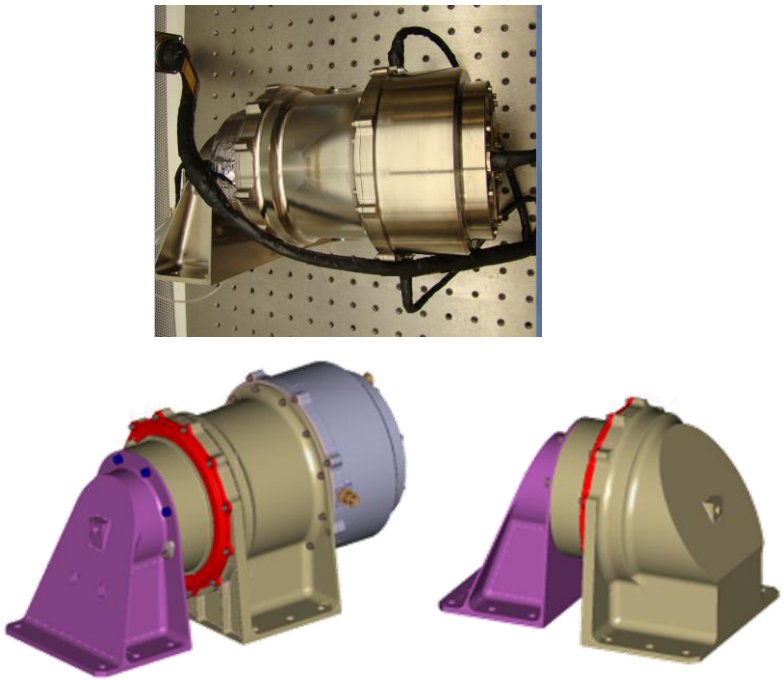

Figure 15-7. SEGA (top & bottom left) and TBA (bottom right)

Solar Array Deployment

The SWS deployment is completed in two stages. The first stage occurs autonomously within hours after launch. At this point (reference Figure 15-8), only the solar panels are deployed by firing the six separation nut shear ties and allowing the inter-panel hinges to deploy the solar array portion of the wing. The remaining SPP, yoke and first stage shear ties are not fired at this time. Once the satellite has reached final orbit, the remaining Solar Array shear ties (the two Frangibolt Frame shear ties, the six SSRD Frame shear ties and the two (not visible as they are on the far side of Figure 15-8) final Frangibolt shear ties) are independently commanded to fire in order to deploy the complete wing assembly. Figure 15-9 below shows the locations of the second stage deployment shear ties. Once these shear ties are fired the wing separates from the spacecraft. The Root Hinge and frame hinges deploy the wing into its final position.

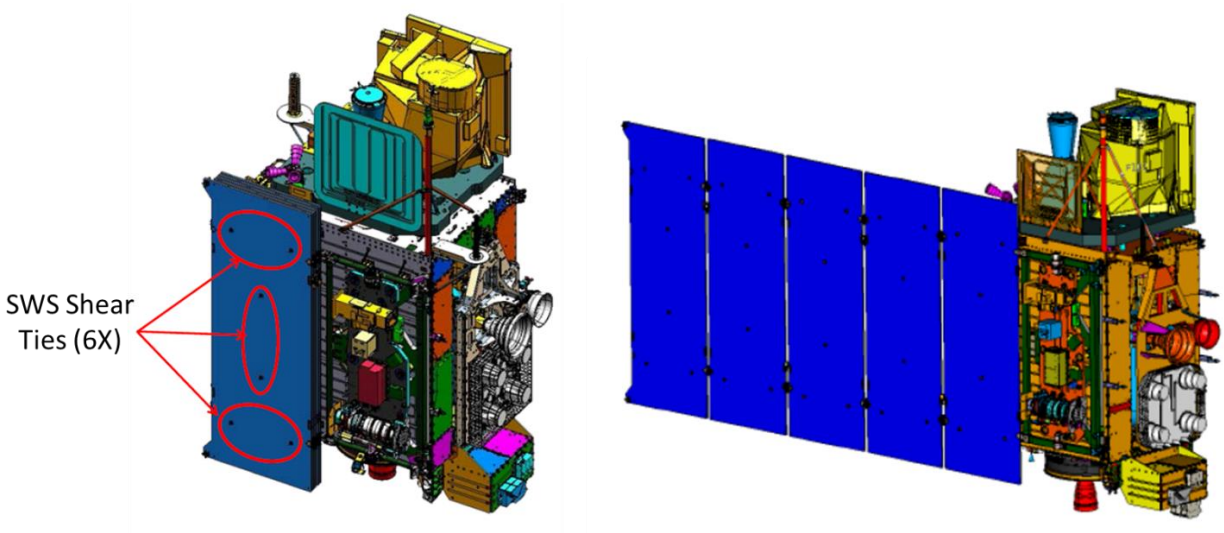

Figure 15-8. First Stage Solar Array Deployment

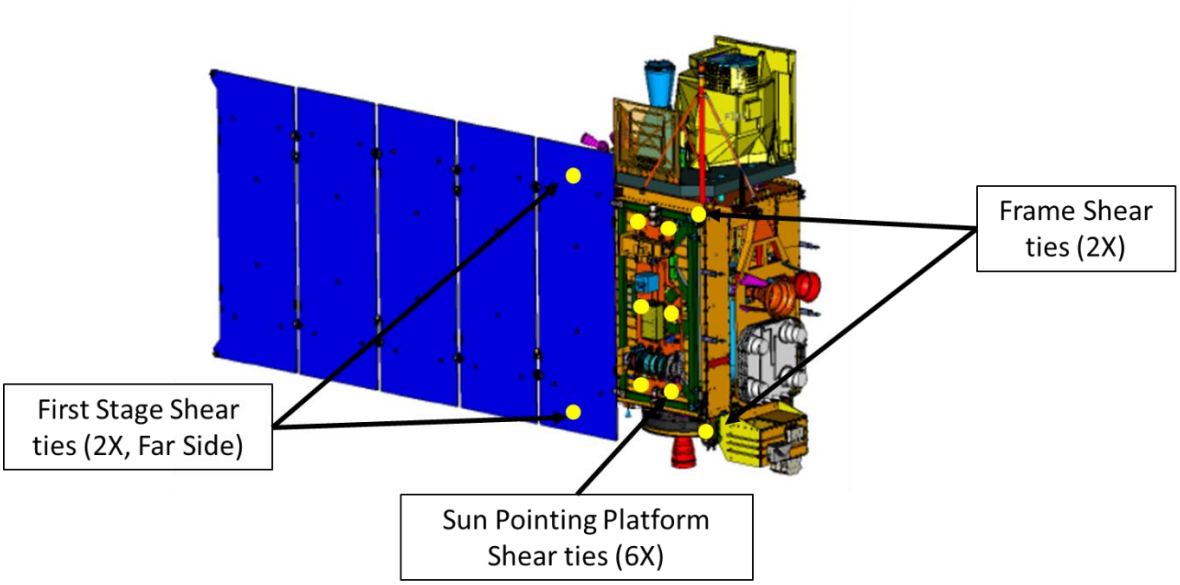

Figure 15-9. Second Stage Solar Array Deployment

After the Solar Wing is deployed, the SADA and SEGA are able to rotate the Solar Wing Assembly and SPP via commanded instructions to the desired position (reference Figure 15-10). The primary function of the SADA and SEGA is to precisely maintain the pointing of the solar instruments at the sun. This action by default then also points the Solar Array cells at the sun for spacecraft power generation.

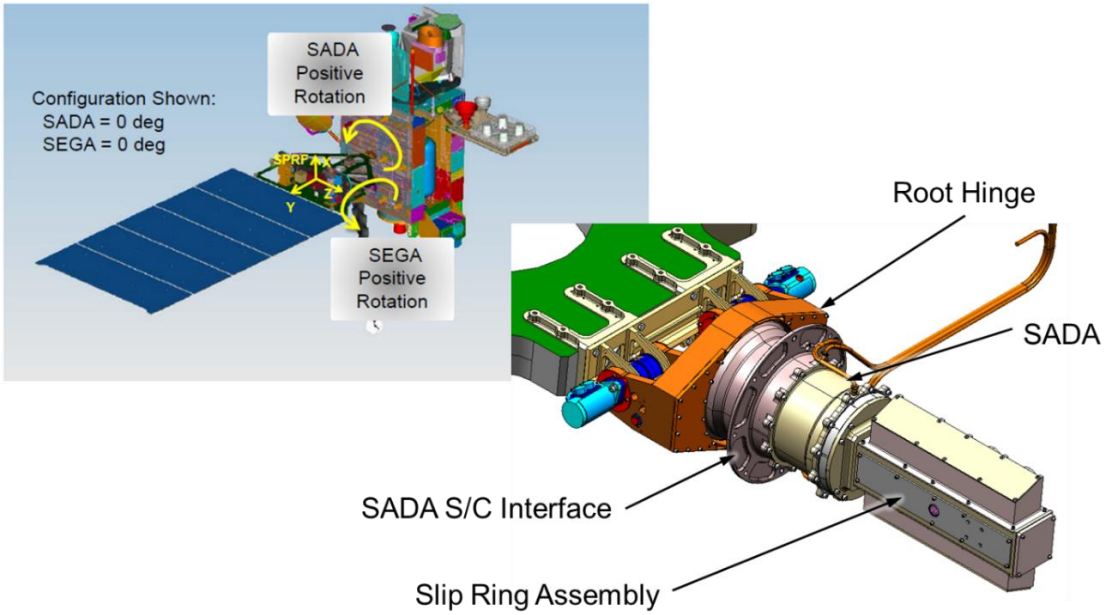

Figure 15-10. SADA and Root Hinge Interface with Solar Wing Assembly

X-band Reflector Antenna Deployment

The X-band Reflector Antenna is held in place using three Frangibolt shear ties. Once the command is given to fire these shear ties, the X-band Gimbal is commanded to deploy the reflector into its final position as shown in Figure 15-11.

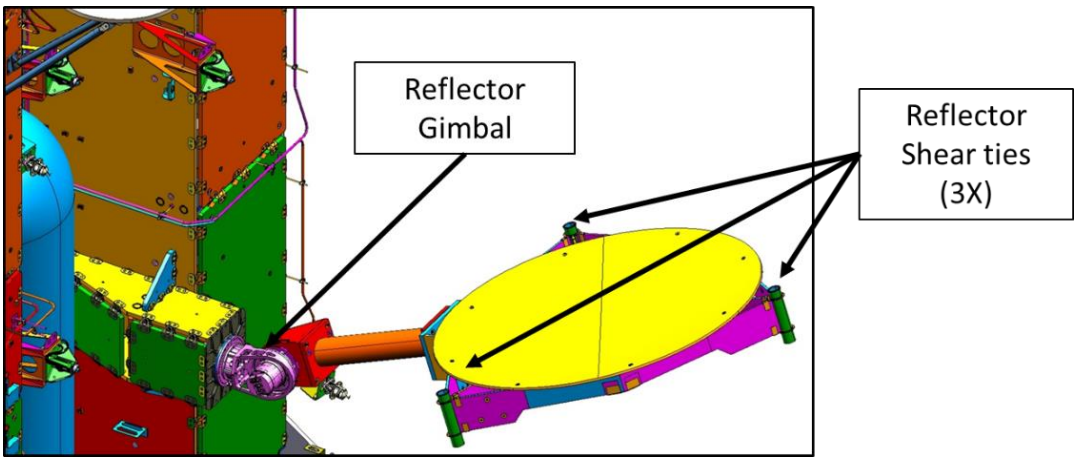

Figure 15-11. X-band Reflector Shear Tie and Gimbal Locations

Antenna Wing Assembly (AWA) Deployment

Similar to the X-band Reflector, the AWA (shown in Figure 15-12) is restrained using four Frangibolt shear ties. The AWA is deployed into its final position via the deployment of the HA-90 hinge. The AWA final deployed position is 90 degrees from the stowed position.

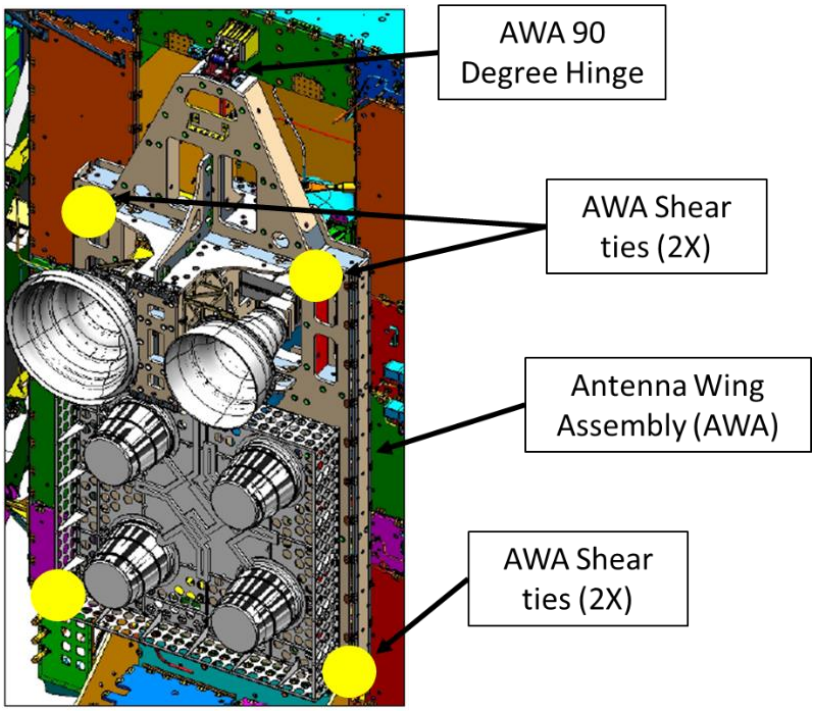

Figure 15-12. AWA

Magnetometer Boom Deployment

The Magnetometer Boom (shown in Figure 15-13) is deployed via a single commanded Frangibolt shear tie release. The boom is deployed by its own stored strain energy in its structural elements.

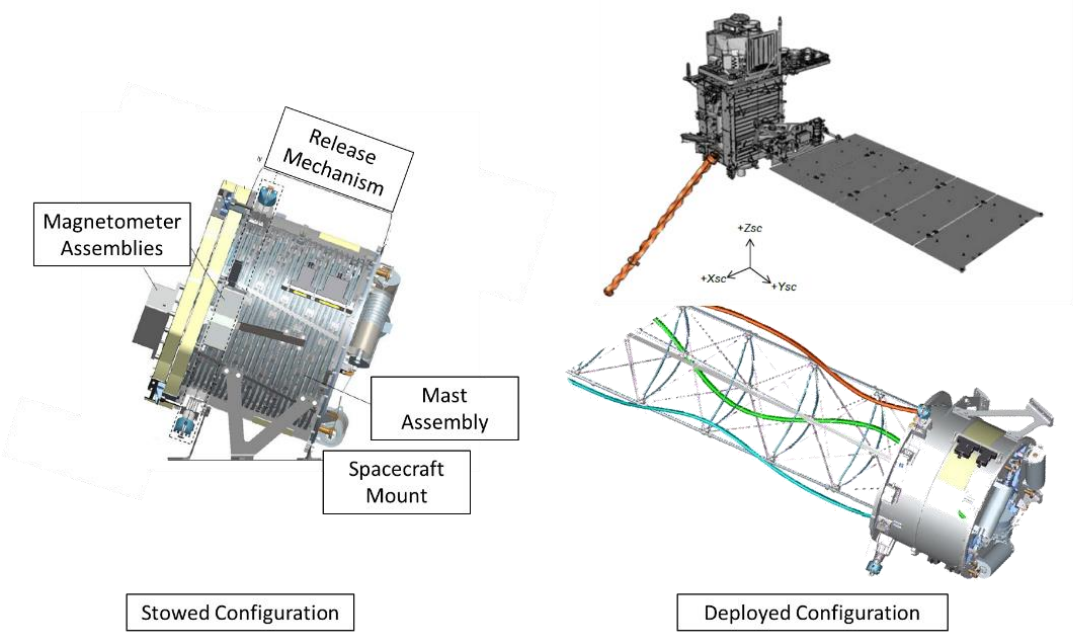

Figure 15-13. Magnetometer Boom Stowed and Deployed Configuration

Earth Pointing Platform Uncaging

The EPP contains four identical Launch Lock Assemblies which retain the EPP during satellite transportation and launch (see Figure 15-14). The Launch Lock assemblies are shear tie type devices that work with a SSRD. The Launch Lock Assemblies allow the uncaging of the EPP and allow it to become suspended via a dampened strut/isolation system. Once released, the Launch Lock upper and lower housing separate providing the clearance required to accommodate the EPP isolation system.

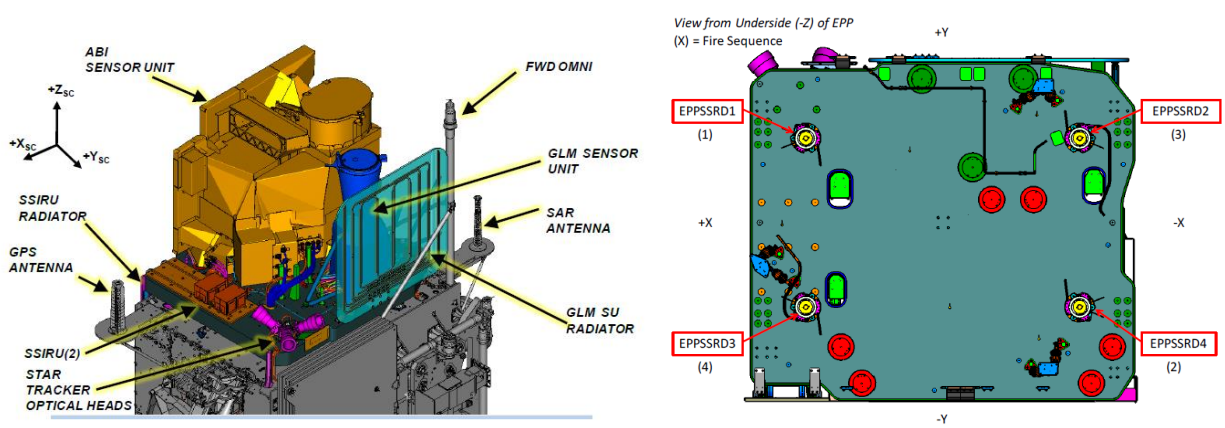

Figure 15-14. EPP and Launch Lock Assembly

Structures

The GOES-R series spacecraft structure is based on the Lockheed Martin A2100.The core structure consists of honeycomb structural panels, which form a box to support the propulsion

system (see Figures 15-15 and 15-16)The core has an integral adapter ring that provides a mating interface to the launch vehicle. In parallel, three thermal heat-pipe embedded panels are assembled to support the system module integration. Once these two structures are mated, additional structures are added to support the primary instrument payloads. A honeycomb EPP is mounted on top of the primary structure and also carries star trackers and the inertial measurement units. A honeycomb cabinet is mounted to the base panel for instrument accommodation. Finally, an articulating honeycomb SPP is mounted to the bus structure just inboard of the solar array. The GOES-R series structures have a mass of 608 kgs.

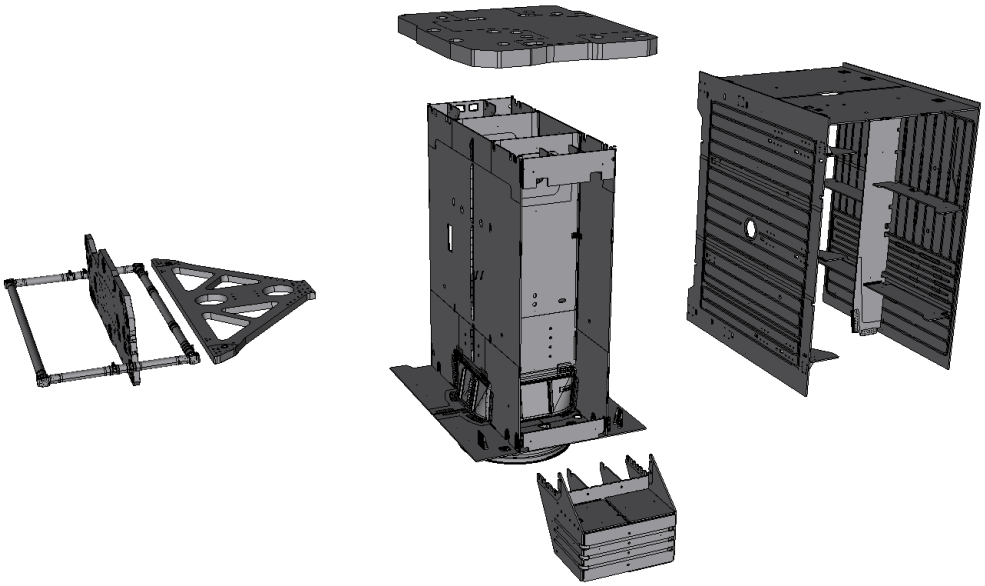

Figure 15-15. Spacecraft Primary and Secondary Structures

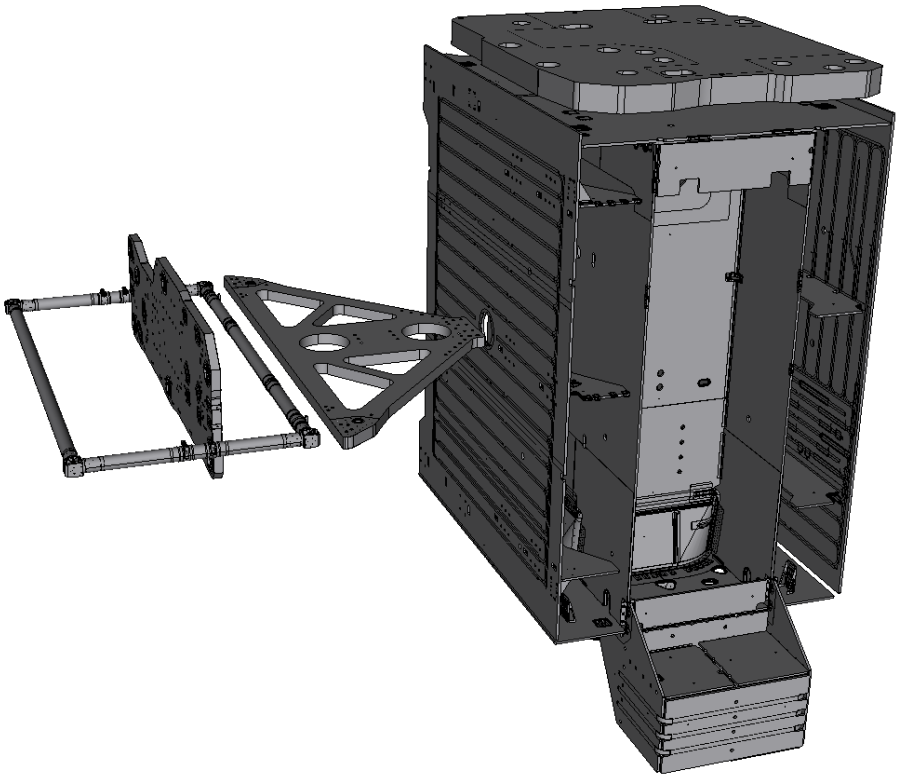

Figure 15-16. Spacecraft Primary and Secondary Structures

This page left blank

16. Ground System Architecture

The GOES-R series ground system (GS) consists of the following:

- GOES-R series core GS
- Antenna system
- Tools and simulators hosted or integrated in the GS
- GOES Rebroadcast (GRB) simulators
- Product Distribution and Access (PDA) components to satisfy GOES-R Access Subsystem requirements

The GOES-R series GS operates from three sites. The NOAA Satellite Operations Facility (NSOF) in Suitland, Maryland, houses the primary Mission Management (MM), and selected Enterprise Management (EM), Product Generation (PG), and Product Distribution (PD) functions, including the Environmental Satellite Processing Center (ESPC) PDA capability. The Wallops Command and Data Acquisition Station (WCDAS), located in Wallops, Virginia, provides the primary Radio Frequency (RF) communications services, EM and MM functions, and selected PG and PD functions. The third site is a geographically diverse Consolidated Backup facility (CBU), located at Fairmont, West Virginia. It functions as a completely independent backup for the MM and selected PG and PD functions for the production of Key Performance Parameter end products (KPPs) and GOES Rebroadcast (GRB) data, and is capable of concurrent and remote operations from NSOF and WCDAS. The CBU has visibility to all operational and on-orbit spare satellites. The KPPs consist of the Level 2+ (L2+) Cloud and Moisture Imagery (CONUS, full disk, and Mesoscale) product and the associated sectorized products. Figure 16-1 provides an overview of the GOES-R System and GS.

In addition to the operational sites, two Operational Support Locations (OSLs) have been implemented to support GS sustainment and maintenance activities and resolve anomalies. The first, known as OSL1, is located at the development contractor facility in Melbourne, Florida. From OSL1, support personnel can access the system at all 3 sites. From the second site (OSL2), located at the National Center for Weather and Climate Prediction (NCWCP) in College Park, Maryland, support staff and government personnel are able to access the NSOF L2+ product generation and distribution capabilities.

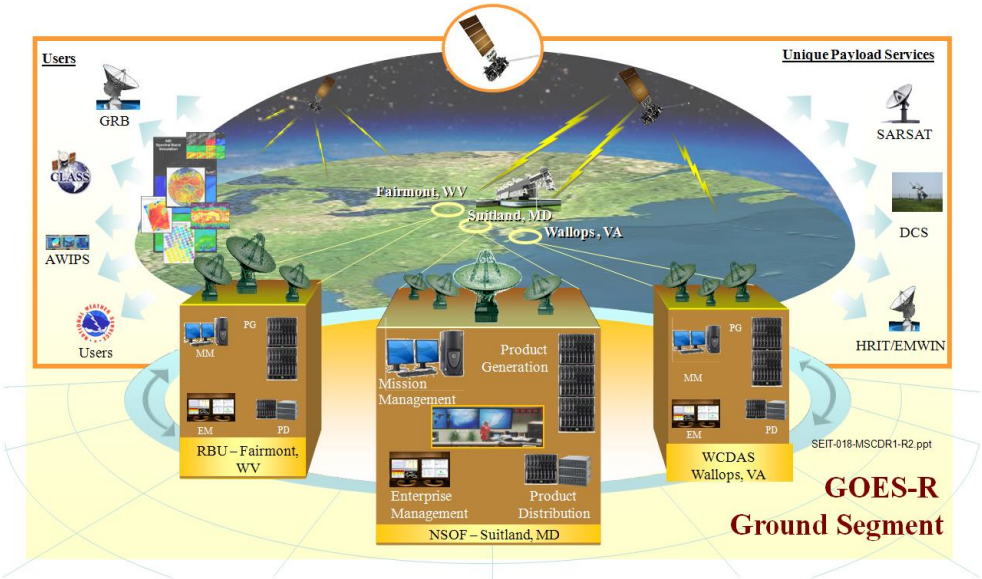

Figure 16-1. GOES-R System and GS Overview

The satellites are commanded throughout their mission lifetime from the NOAA Satellite Operations Control Center (SOCC) located at NSOF with the ground station RF interface located at WCDAS and CBU. The engineering telemetry streams are received by WCDAS and CBU, and then ground relayed to the SOCC for processing and monitoring at all locations.

In nominal operations, the raw sensor data is received by WCDAS, processed by the PG function at WCDAS to create Level 1b (L1b) and L2+ GLM products. These L1b and L2+ GLM products are then rebroadcast through the spacecraft GRB transponder. Additionally, sectorized L2+ cloud and moisture imagery products are distributed directly from WCDAS to the NWS AWIPS, and from there onto NWS Weather Forecast Offices (WFOs) and other AWIPS users.

The GRB data is received at NSOF where the rest of the L2+ products are created. Ancillary data used in generating the L2+ products are ingested from the Ancillary Data Relay System (ADRS). Applicable products are directly distributed to the PDA component of ESPC, which provides the GOES-R Access Subsystem (GAS) functionality, and provides data to NESDIS offices, NWS, CLASS for long term archive and access supporting retrospective users of GOES data and other GOES data users.

At the CBU, the raw sensor data, as well as GRB, is received through its RF interface and processed by the PG function. The CBU is limited to the production of data to support L0, L1b, and L2+ GLM generation in support of the creation and distribution of GRB, and the production of sectorized KPPs for distribution to AWIPS. The CBU is an always-on “hot” backup in order to allow the GS to meet its requirement for 5-minute failover in support of high availability mission operations and KPP generation and distribution.

The GS includes separate development and integration and test (I&T) environments for the purposes of ongoing development and I&T throughout the GOES-R series mission. Portions of these environments are located at both NSOF and WCDAS to support local site development and I&T activities. Figure 16-2 shows the primary data flows through the system.

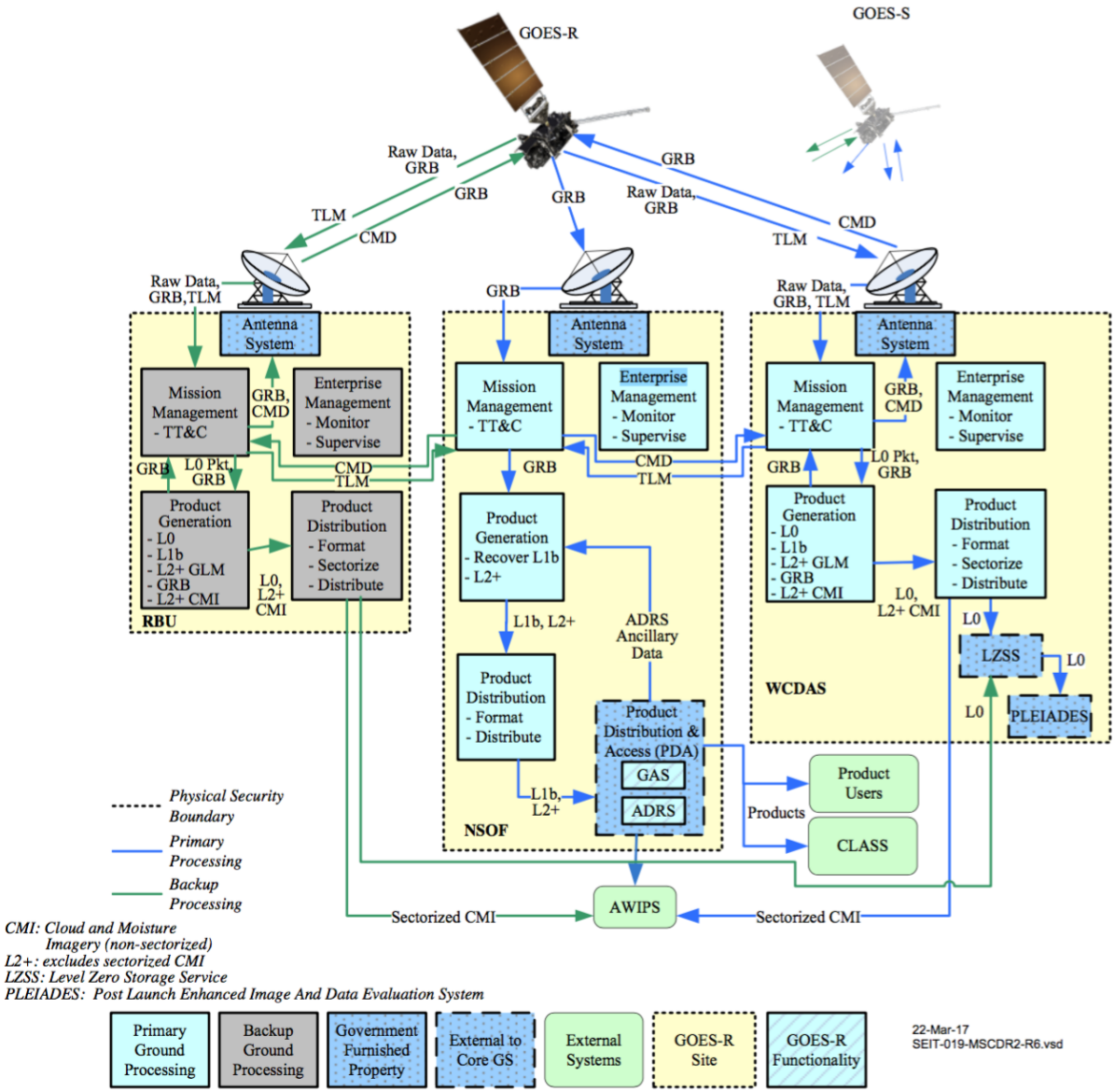

Figure 16-2. GS Primary Data Flows

Overview

The GOES-R series core ground system provides the following high level functions:

- Mission Management (MM), which includes
  - Space-Ground Communications (SGC)
  - Telemetry and Commanding
  - Spacecraft Navigation
  - Mission Planning and Scheduling
- Data Operations (DO), including
  - L0, L1b, and L2+ product generation
  - Product distribution to PDA, and via the AWIPS interface
  - Product monitoring
  - Product performance monitoring
- Enterprise Infrastructure (EI), including
  - Enterprise supervision
  - Configuration Management (CM)
  - Data Storage, including
- Mission life data storage
  - 5-day (revolving temporary) data storage for CCSDS transfer frames
  - 2-day (revolving temporary) data storage for other data products, intermediate products, and related data
  - Life of mission storage for command and telemetry data
- Network Management

Mission Management (MM) Element

The Mission Management (MM) element provides the capabilities needed for satellite operations. The MM element architecture uses both custom-developed and off-the-shelf (OTS) products, including the OS/COMET® software product for satellite ground control systems. MM can operate without any dependence on the other GS elements. Control and status for ground equipment is provided through device-specific drivers that interface with the equipment and integrate the use of those drivers into the OS/COMET toolset. Control and status for the antenna system is integrated with OS/COMET.

Mission Management Element Functions

The Mission Management element provides the following functions that are directly related to user and operator mission operations:

- Mission Operations: Handles satellite command and command verification, flight software maintenance, ground directives, and anomaly responses. It also handles satellite telemetry monitoring and processing and provides control and status of ground equipment. OS/COMET is used to accomplish the mission operations capabilities.
- Spacecraft Navigation (SCN): Performs Orbit and Attitude (O&A) determination, compares O&A solution to that generated by the spacecraft, generates orbital event times, and plans spacecraft maneuvers. Spacecraft O&A and orbital events are used to support instrument planning and operations. SCN is comprised of the OTS product Focus Suite, which has been tailored and configured to support the GOES-R series mission.
- Mission Planning and Scheduling (MPS): Handles mission scheduling and planning for all satellite activities and handles integration with ground maintenance schedule. MPS is composed of custom-developed software that integrates with both OS/COMET and Focus Suite.
- Space-Ground Communication (SGC): Using a set of modems and front-end processors, the SGC ingests and pre-processes satellite telemetry data used for satellite health and status monitoring. MM also ingests the X-band raw data and processes it to remove higher-level Consultative Committee for Space Data Systems (CCSDS) protocols; then outputs Command and Data Acquisition (CDA) telemetry, supplemental instrument data, and science data packets to PG.
- MM Storage: Coordinates logging and storage of MM operational data, including storage that is available for secure remote access. MM Storage makes data available to the CASSIE (Contextual Analysis for Spectral and Spatial Information) engineering analysis tool.
- GRB Data Routing: Receives GRB data from PG and routes it to the antenna system for RF distribution.
- Antenna Monitor and Control: Provides the monitoring and controls of the GOES- R antennas.

Data Operations Description

The core GS Data Operations (DO) functions are comprised of the PG and Product Distribution (PD elements. These functions include:

- L0, L1b, and L2+ Processing
- PG Infrastructure and Service Management
- Product Monitoring and Product Performance
- End Product sectorization and re-projection, and formatting

- Distributing end products (per current PD configuration) and non-products (e.g. ancillary data, algorithm packages)
- Formatting Intermediate data files for PG and storing them in the 2-Day-Store (2DS)
- Processing retransmission requests for PDA

Product Generation Element Functions

The PG element generates L0, L1b and L2+ products from each GOES-R series operational satellite on a continuous basis, meeting the applicable product latency requirements. PG continually processes data as it is received at all three GOES-R GS sites. Although the PG functions are fully automated, the Ground System Product Operator can monitor generated product processing and quality. The PG element functions fully support a satellite's ABI, GLM, SEISS, EXIS, SUVI and Magnetometer instruments when in its operational slot, and alternately supports a satellite's SEISS and Magnetometer instruments when in its on-orbit storage slot. To enable the high throughput, low latency required for DO, a solid state distributed memory cache is utilized (referred to as the "data fabric"). This distributed memory cache provides high throughput, low latency, flow control, fault tolerance, and linear scalability with direct access to its contents from computer servers across the GS. All of these features are key to satisfying product latency, operational availability, data delivery, and scalability requirements.

Product Monitoring monitors the GRB data downlink products with respect to radiometric and geometric performance and reports status. Product performance provides for additional insight into the performance of L1b and L2+ data operations.

Product Distribution Element Functions

The PD element provides near-real-time continuous network distribution of GS products and data. PD functionality is at all three GS locations: NSOF, WCDAS, and the CBU. The CBU and WCDAS provide selected PD functions for the generation, formatting and distribution of sectorized products to the NWS via the AWIPS interface and via GRB. In addition, the CBU is capable of standalone PD operations for a limited set of products to enable generating, formatting, and distributing products when one or both of the other two facilities (WCDAS and NSOF) are inoperable.

PD provides configuration displays through a graphical user interface (GUI) that allows an operator to monitor delivery status, configure message filtering, configure PD products for AWIPS, or configure which products are being sent to PDA. Any authorized operator's console can be configured to show the PD displays.

PD also provides key storage for the core GS in the form of the 2DS and the mission life store (MLS). The 2DS provides for retransmission to PDA if an error in transmission occurs. Instrument calibration data sent to PDA comes from the PD MLS. The 2DS can also be accessed by PG to extract, if needed, operator-selected products for use in support of analyzing anomalous conditions. PD moves data into the PD MLS automatically as well as manually. Selected end products are automatically stored in the PD MLS along with histories of ground directives and security events.

Enterprise Infrastructure

The Enterprise Infrastructure (EI) capabilities of the GS are comprised of the Enterprise Management (EM) and Infrastructure (IS) elements. Together these elements provide the core GS monitoring and control capabilities. The IS element contains the majority of the core GS hardware. EI also provides the GS with its security monitoring, access control/authentication, and public key infrastructure (PKI) functionality.

Inter-site Network Communication

The NOAA Science Network (N-WAVE) provides inter-site communication services for GOES-R data transfers between NSOF, WCDAS, and CBU, as well as providing communications between WCDAS/CBU and the AWIPS Network Control Facility (ANCF) and Test Network Control Facility (TNCF) in Silver Spring, Maryland, and the AWIPS Backup Network Control Facility (BNCF) in Fairmont, West Virginia. In addition, N-WAVE provides communication support between the system and the GS factory, and between the system and NCWCP. These services are provided through a multi-protocol label switching (MPLS) wide area network (WAN). GOES-R services are a part of the NOAA Office of Satellite and Product Operations (OSPO) MPLS WAN. Path availability between the GS and AWIPS is specified at 99.9%. A high-level overview is shown below in Figure 16-3.

In addition to N-WAVE, a set of optical-carrier (OC-3) (155.52 Mbps) links are in place for direct point-to-point connectivity between sites to support mission operations. These circuits provide a parallel path via a separate, independent network service provider to help increase reliability for critical MM inter-site network traffic.

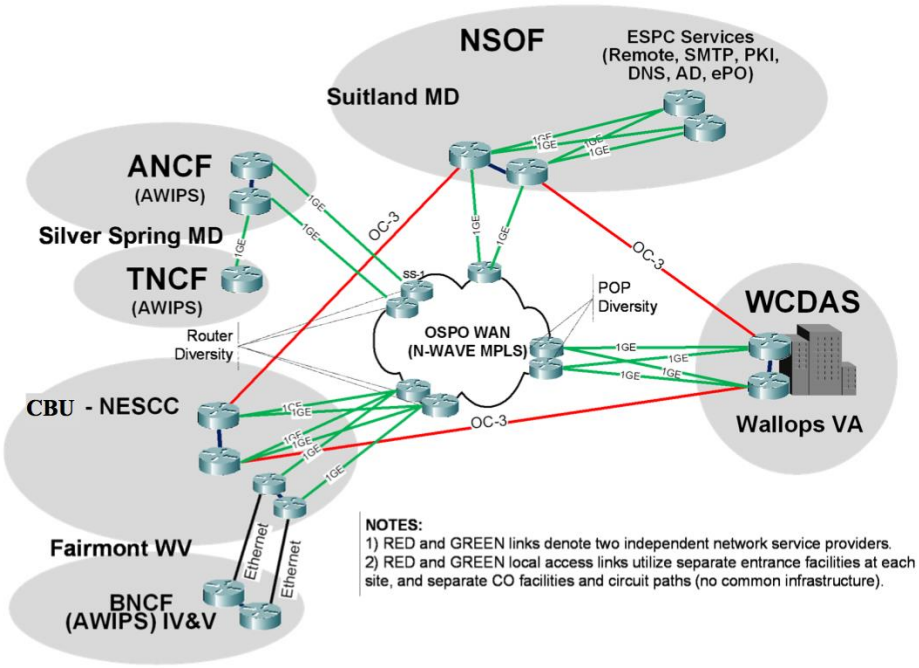

Figure 16-3. Inter-site GOES-R Series GS Networks

GOES-R Series GS Environments

In order to support concurrent operations, integration and test, and development activities, the core GS is segregated into three environments. Each of these environments spans sites and security boundaries to meet GS functional requirements. In addition, the core GS edge provides the interfaces to external systems that receive GOES-R series data, and allows for authorized users to remotely access GS edge resources via the NOAA virtual private network (VPN) capabilities. Figure 16-4 provides an overview of the GS environments across sites, security zones, and functional elements.

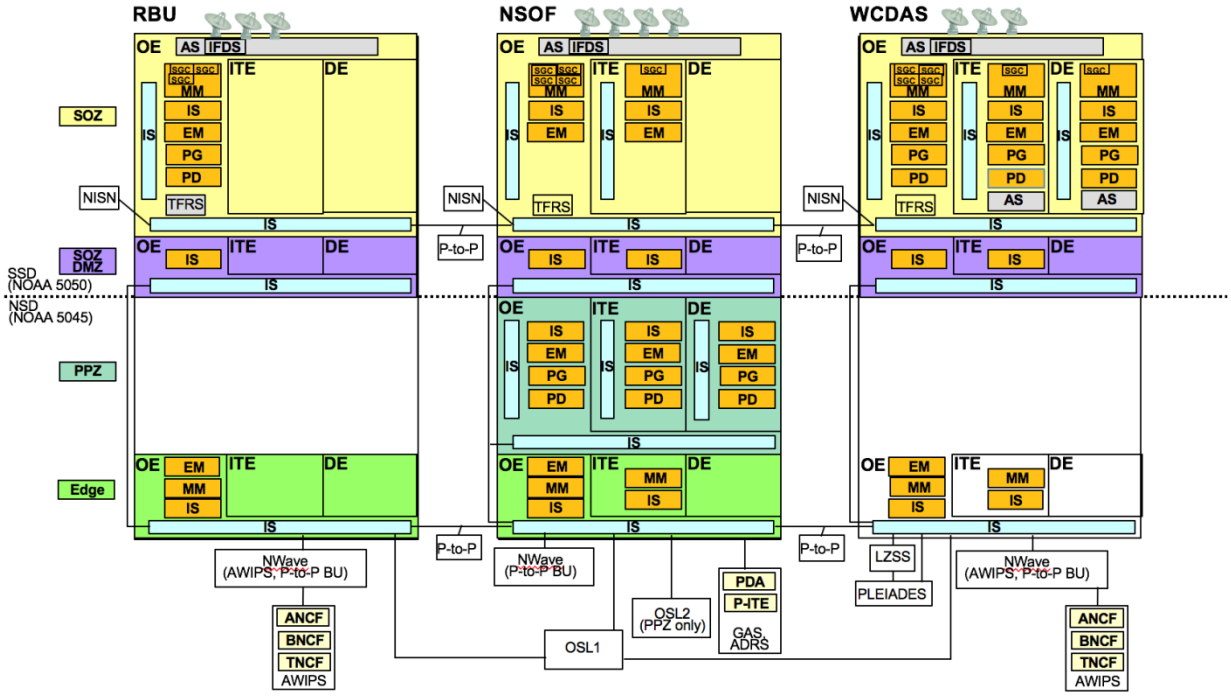

Figure 16-4. GS Environments by Site and Element

Operational Environment

The GOES-R series Operational Environment (OE) supports the operational GOES-R series mission. OE functionality spans all sites. In the Satellite Operations Zone (SOZ) (within the NOAA 5050 security boundary), all three sites provide operational mission management functionality. WCDAS and CBU provide data operations for L0, L1b, and selected L2+ processing for data distribution via GRB and to the NWS via the AWIPS dedicated interface. At NSOF, the Product Processing Zone (PPZ) OE receives L1b data via the GRB stream and processes it further into L2+ end products, which are distributed to the user community via the ESPC PDA system. The OE is tightly configuration managed and changes to the OE are developed, deployed, and tested in non-operational environments before moving to the OE.

OSL1 accesses all three sites and both SOZ and PPZ security zones via the GOES-R edge. OSL2 only has access to the PPZ in support of NSOF L2+ data operations.

Integration and Test Environment

ITE consists of capabilities to verify the element functionality prior to deployment in the operational environment. The ITE capabilities are implemented at the NSOF and WCDAS sites. The ITE only has one PG/PD (DO) data processing string. As a means to test the distribution of products to the PDA ITE and the TNCF with the full operational load, the ITE includes the capability to simulate the distribution of products from two satellites concurrently making use of the data generated from the one available PG/PD data processing string.

The Core GS ITE supports realistic test activities by mimicking the OE. This realistic testing extends beyond the core GS to the external interfaces (AWIPS, Level Zero Storage Service (LZSS), and PDA) integration and test environments. Thus, GS software and hardware modifications can be tested across the end-to-end system prior to being deployed to the operational environments.

Development Environment

The GOES-R Development Environment (DE) consists of two physically isolated sets of hardware that do not directly communicate electronically with each other. The two DEs are separated by site and are in different security domains. The SOZ DE resides at WCDAS with additional SOZ workstations at NSOF. Note there is not a DE at the CBU. The PPZ DE resides at NSOF. The PPZ DE may also be accessed by authorized users remotely through the NOAA Network Operations Center (NOC) VPN to employ read/write/execute transactions, but not for data upload or download.

Remote Access

The GOES-R series GS provides a set of resources that are accessible to authorized users who are not physically located at a GS site via the GOES-R Edge. This remote access capability allows users with accounts and permissions to utilize a limited set of GS resources, while not within the physical boundaries of the GS facilities. Using remote access, users have the ability to download data to their own computing resources, view data and manipulate data using tools provided by the core GS. Capabilities available via remote access include:

- Access to Level 0 data via the LZSS using the secure file transfer protocol (sFTP)
- Access to telemetry data and the CASSIE engineering analysis tool via Mission Management servers located in the edge at all three GS facilities
- Access to other MM data such as ground directives, command procedures, schedules, and INR reports
- Access to the ABI PLEIADES (Post-Launch Enhanced Image and Data Evaluation System) tool to support ABI post-launch test (PLT) and anomaly resolution activities (limited access to ABI vendor only)
- Access to the PPZ DE in support of the implementation and assessment of potential changes and upgrades to the GS L2+ DO capabilities

Remote access is accomplished via obtaining access to the NOAA NOC VPN, and by obtaining a GOES-R system account with remote access permission. Remote access is constrained by the available bandwidth between the GS and external partners, as well as by the number of concurrent remote user sessions permitted by the NOAA NOC.

Level 0 Data Products

GOES-R L0 data is a collection of CCSDS packets for each instrument collected over a period of time unique for that instrument. This consists of reconstructed unprocessed instrument science data and instrument engineering data packets at full resolution, as sent by the instrument, with all communications artifacts (e.g. synchronization frames, communications headers) removed. These packets are extracted from the multiplexed packets within the transfer frame.

This data comes from Earth-looking (ABI and GLM) and space-looking instruments (SUVI, EXIS, MAG and SEISS) at full resolution and includes science, engineering and diagnostic data along with their instrument calibration parameters. L0 data also includes Orbit and Attitude (O&A)/Angular Rate (OAR) telemetry data, containing orbit ephemeris and satellite position extracted from selected telemetry packets. Each instrument receives OAR data as a part of its L0 data stream and includes this data as a part of its L0 product files.

Level 1b Data Products

The L1b product is composed of GOES-R Level 0 (L0) data with radiometric and geometric corrections applied to produce parameters in physical units. It includes calibration tables and associated metadata as developed by the GOES-R Product Generation (PG) software. In addition to being a standalone product, the L1b product is an input into Level 2+ (L2+) product processing.

GRB Content

GRB is a 31 Mbps direct readout broadcast that replaces the 2.1 Mbps GVAR legacy format. It contains a set of products consisting of L1b products from all instruments, L2+ GLM and associated metadata, and GRB Information (INFO) Packets containing satellite operations schedules, status information and orbit state vectors. GRB INFO packets also include semi-static L1b algorithm calibration parameter tables which are transmitted after an update. GRB is sent to the GOES-R satellites from WCDAS for rebroadcast to the GOES-R sites and GRB users. Back-up GRB transmission capability is available CBU site.

The GRB is received at the NSOF, from which L1b, L2+ GLM and GRB INFO Packets products (including L1b algorithm calibration parameter tables) are recovered, and the remainder of the L2+ products are created, as well as sectorized Cloud and Moisture Imagery (CMI) products

A simplex link is used for GRB. A dual circular polarization is used to accommodate the 31 Mbps data rate within a frequency bandwidth constraint of 12 MHz using a standard downlink modulation at 1686.600 MHz (L-band). The GRB processed instrument data source is packetized compliant with CCSDS Space Packet Protocol standard (CCSDS recommendation 133.0-B-1), and utilizes lossless data compression to fit within the allocated bandwidth.

Level 2+ Data Products

GOES-R L2+ products include all Level 2 and higher products. Level 2 refers to derived environmental variables (e.g., sea surface temperature) at a comparable temporal and spatial resolution to the Level 1 source. L2+ includes data or retrieved environmental variables which have been spatially and/or temporally resampled (i.e. derived from Level 1 or 2). Such resampling may include averaging and/or compositing. L2+ can also include model output or results from analyses of lower level data (i.e., data that are not directly measured by the instruments, but are derived from these measurements).

GOES-R L2+ products may be distributed to end users either via the ESPC PDA interface or via the direct interface to the NWS (for sectorized cloud and moisture imagery only).

GOES-R Series Antenna System Overview

The GOES-R series antenna system is part of the comprehensive GS and supports the mission management element of the core GS. The antenna system includes all components across all three sites required to receive or transmit RF signals to/from the satellites through the Intermediate Frequency Distribution System (IFDS) interface demarcation point with the GS. The ground station resources consist of three new 16.4m hurricane-rated (HR) antenna stations at WCDAS, three new 16.4m HR antenna stations at CBU, and upgrades to four existing 9.1m receive-only systems at NSOF. Figure 16-5 provides a notional view of a 16.4m antenna station at site.

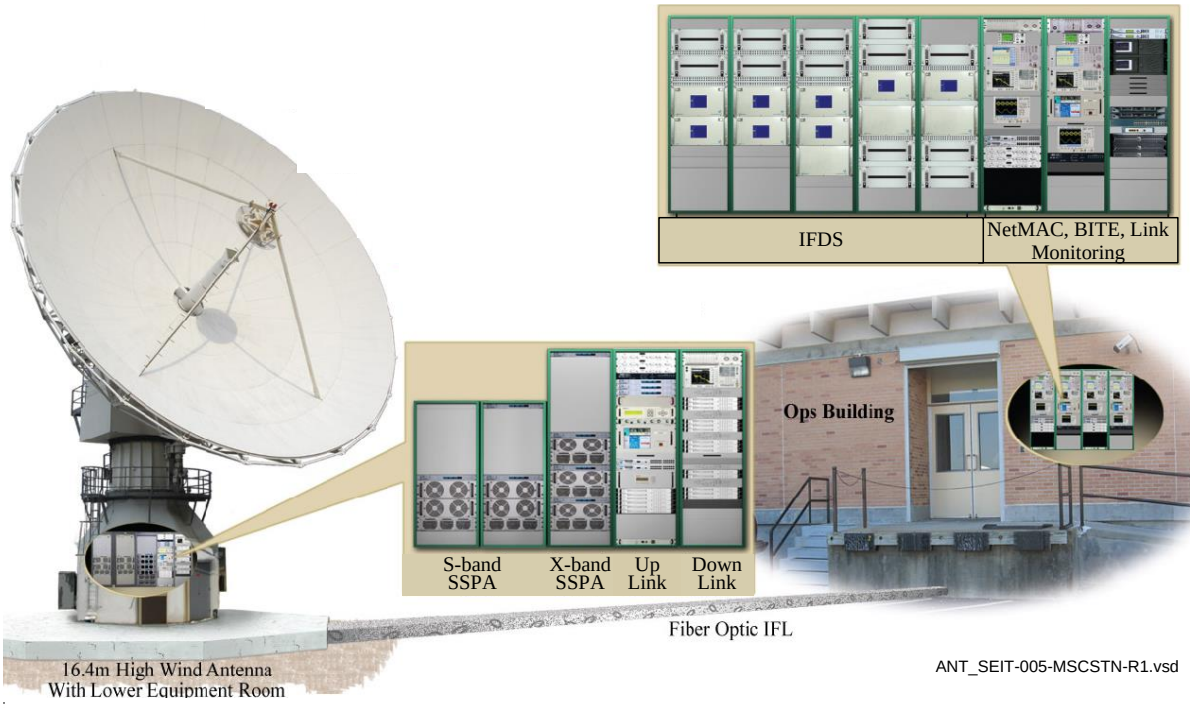

Figure 16-5. GOES-R Series Antenna Station

The architecture is divided into three major functional subsystems: the Antenna Subsystem, the Monitor and Control (M&C) Subsystem and the Site Preparation and Construction Subsystem. The Antenna Subsystem consists of the components for the 16.4m Antenna (including Antenna Control, Tri-band feed design (X-, S-, and L-band), reflectors, trusses, drive trains, and pedestal bases), the RF Uplink and Downlink functionality, Data Collection System (DCS), Intermediate Frequency Distribution Switch (IFDS) and Timing and Frequency Reference System (TFRS). The Antenna Subsystem also upgrades existing 9.1m antenna feed assemblies to support the receipt of the circularly polarized GRB signal from GOES-R series spacecraft. The M&C Subsystem

includes the functionality for Antenna Station control, link monitoring, Built-In-Test/ Built-In-Test-Equipment (BIT/BITE), and Antenna System Interface Simulators (ASIS). The Site Preparation and Construction Subsystem consists of the foundation design, power interfaces, HVAC, physical security and safety components. Figure 16-6 shows the antenna system architecture components at each facility.

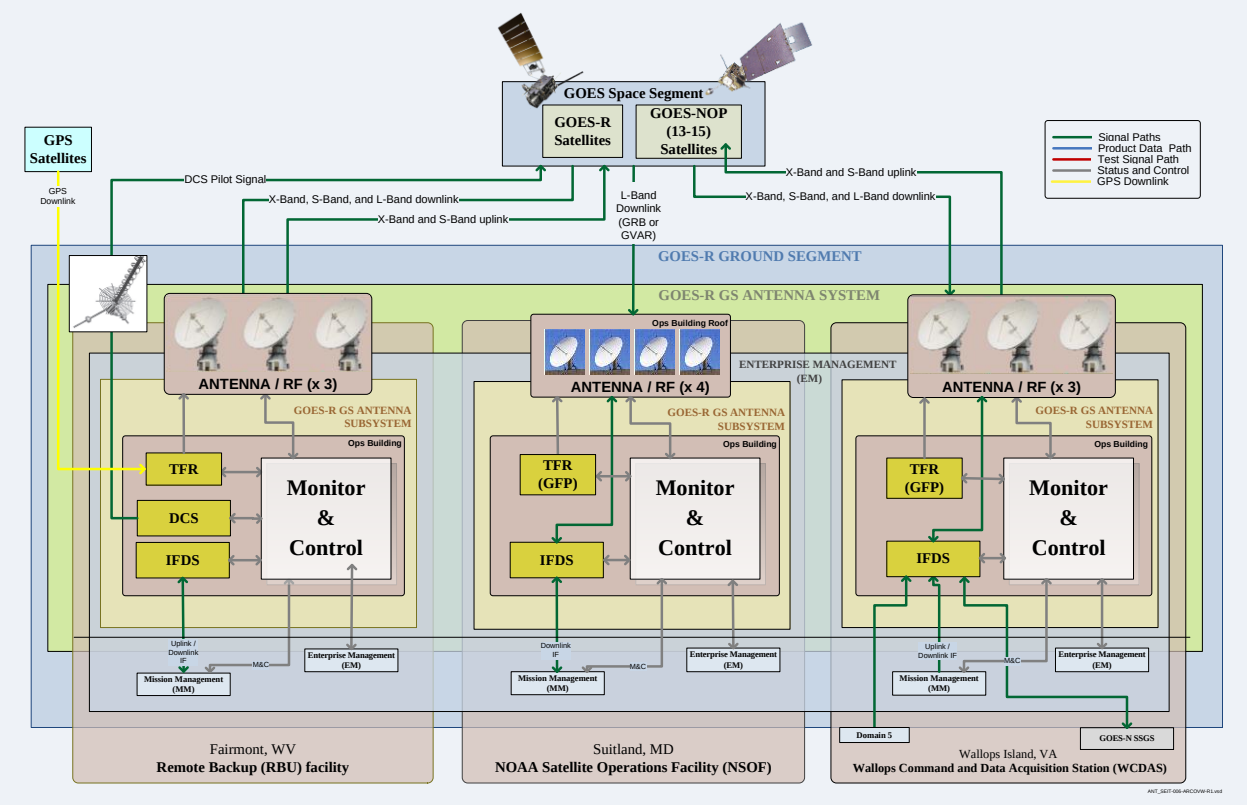

Figure 16-6. GOES-R Antenna System Architecture

WCDAS currently provides all primary space-ground communication functions and sensor data processing for the on-orbit GOES constellation and will perform the same role for the GOES-R series. WCDAS houses the antenna suite required for dedicated links to each operational and stored spacecraft, the front-end equipment to acquire data and to uplink commands and data services, and the associated network interfaces to provide data to the GOES-R series system. WCDAS also interfaces with and provides uplinks to the Unique Payload Services for broadcast. Unique Payload Services provides communications support to the Data Collection System (DCS), the High Rate Information Transmission/Emergency Managers Weather Information Network (HRIT/EMWIN), and Search-and-Rescue Satellite Aided Tracking (SARSAT). More information on the GOES-R Unique Payload Services can be found in the Communications Subsystem section. The 16.4m HR antennas are fully backward compatible to support both the GOES-R and legacy GOES missions.

At NSOF, GRB data is received directly from GOES-R Series spacecraft via four 9.1m receive-only antennas located on the roof of the NSOF facility. These antennas have been upgraded to

receive GRB from GOES-R in addition to GVAR data from legacy GOES spacecraft. Also, the NSOF has capabilities to perform remote operation of WCDAS functions.

Continuity of Operations (COOP) requirements drive the GOES-R series to include a remote site that provides the critical functions of WCDAS and NSOF through the production and distribution of GRB and key product data. Operation of the CBU is the primary contributor to fulfilling COOP requirements and may also be used to enhance system availability. Although the new GOES-R series antennas at CBU are compatible with legacy GOES, the CBU does not include the ground processing equipment to provide backup for legacy GOES satellites.

Unless the antennas are being used for testing, training, or are in maintenance, the CBU antennas serve as back-up antennas, positioned at the nominal satellite look angles to minimize switchover time. The only exception to this would be the need to stow the antennas under high wind conditions. Under high wind conditions, the 16.4m and 9.1m antennas must be driven to the stow position (90º elevation). The 16.4m antennas are specified to operate in up to 110 MPH winds and must be driven to stow in 135 MPH winds.

Periodic performance testing can be performed remotely on the RF uplinks and downlinks. The antennas and control systems at CBU will be exercised remotely to verify proper tracking performance on satellite. These steps ensure that these systems will perform as expected upon switchover to CBU operations.

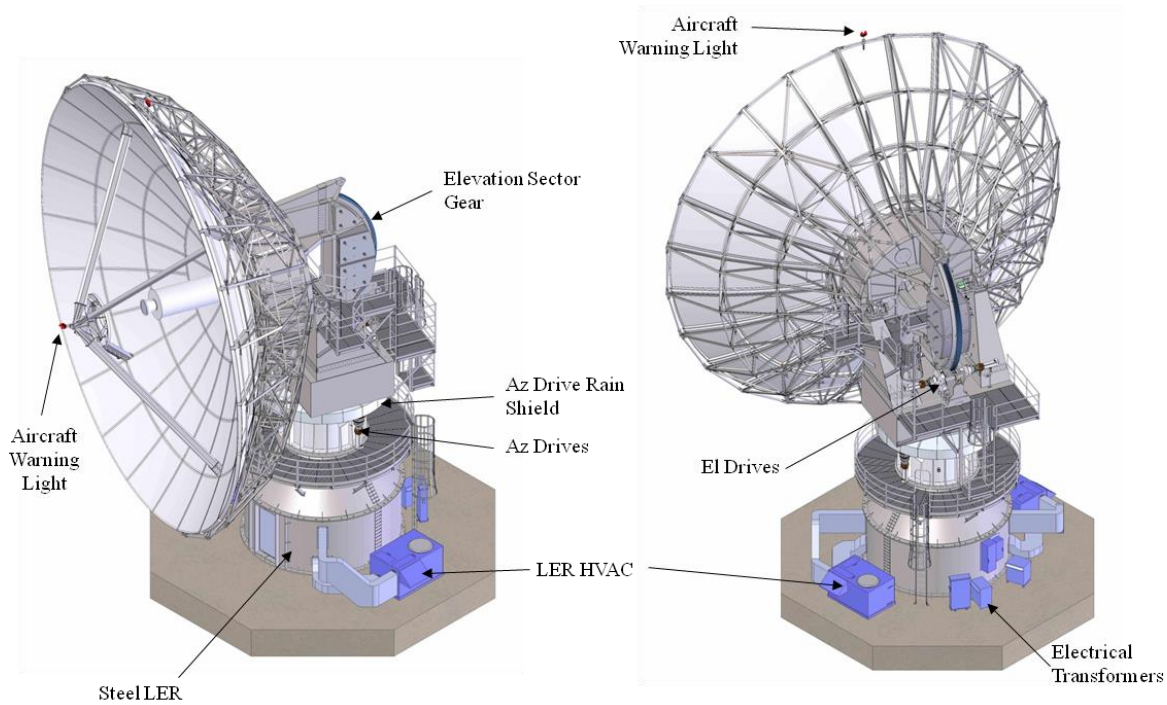

Figure 16.7 GOES-R 16.4m Antenna

Tools and Simulators

Three classes of tools interact with the GOES-R series GS. Integrated tools reside in the GOES-R GS OE, ITE, and/or DE workstations or servers. These tools are allocated GS requirements

and are necessary for system operations. Hosted tools reside in the core GS for mission operations support, post-launch testing, or calibration/validation activities. These tools are not allocated requirements, but they support the GOES-R series mission. Finally, a third set of offline tools receive GS data but are not hosted within the core GS. These tools may reside at vendor factory sites or on offline workstations at NSOF. Offline tools are not considered part of the GOES-R series GS.

Integrated Tools

Examples of integrated tools include CASSIE, the GOES-R Parameter Database (PDB) tool, the Custom Object Dump Tool (CODT), and the Level-0 Storage Solution (LZSS). These tools fulfil specific mission requirements for mission or data operations. CASSIE provides engineering analysis capabilities to the Mission Operations Support Team (MOST) and accesses data directly from the core GS mission life store. The PDB and CODT are used for spacecraft and MAG memory management and interact directly with MM software used to uplink commands and memory loads, and to dump memory files. The LZSS receives L0 data directly from the core GS as netCDF (Network Common Data Form) files. These files are stored permanently for PLT data and for two years for non-PLT data, and they are made available to LZSS users via the NOAA remote access interface.

Hosted Tools

Hosted tools have been developed by multiple parties. These tools are not necessary to meet GOES-R requirements, but they are useful to mission and data operations teams during various phases of the GOES-R mission. Hosted tools include the GOES-R ABI Trending and Data Analysis Toolkit (GRATDAT) and PLEIADES. These tools are used for post-launch data assessments as well as for long-term or infrequent calibration activities. Hosted tools reside within the GOES-R GS on dedicated servers with operator access from both WCDAS and NSOF. (In the case of PLEIADES, a separate set of hardware has been installed to host the tool). Environments for hosting of external tools are shown in Figure 16-8.

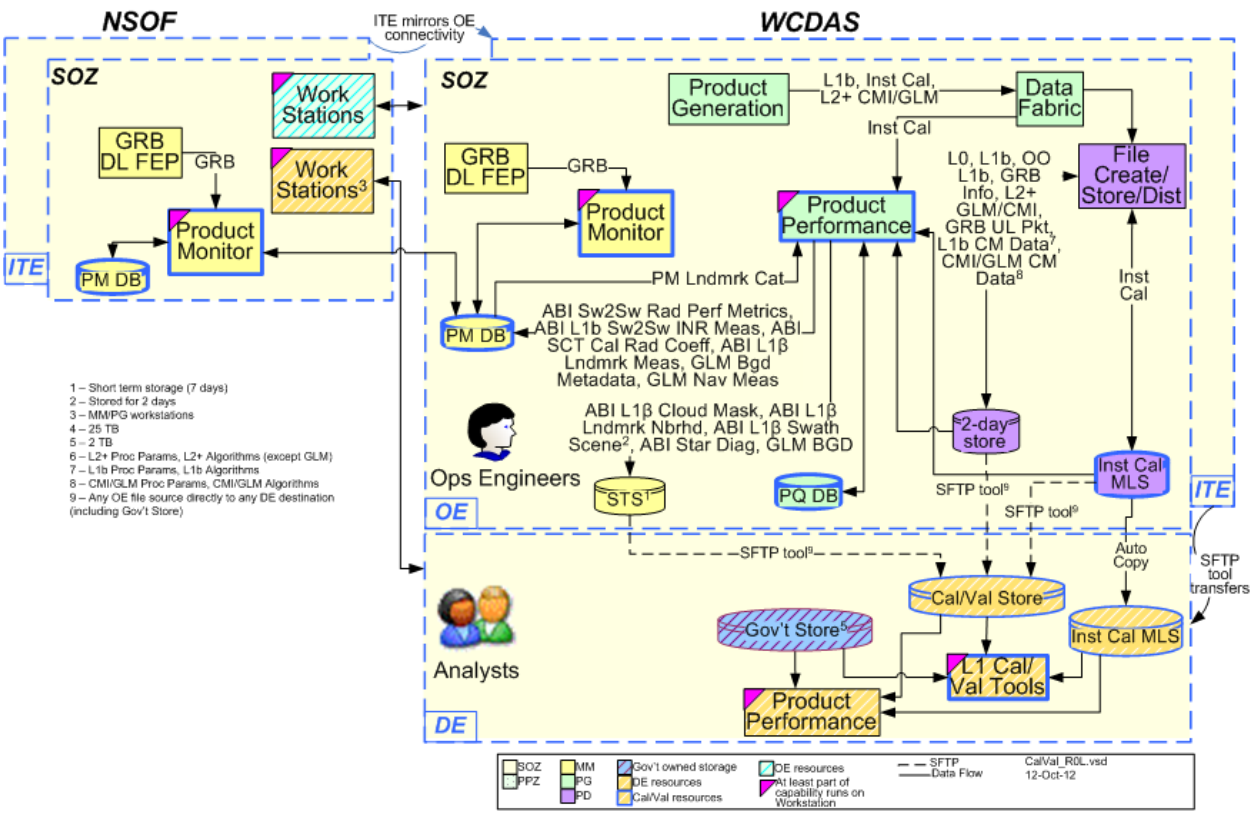

Figure 16-8. System Storage and Hosting of Tools

Offline Tools

Other off-line tools reside outside of the GOES-R series GS at locations such as instrument vendor sites or NESDIS' Center for Satellite Applications and Research (STAR). These tools are not a part of the GOES-R GS, but they may be used by mission operations staff in support of the GOES-R series mission. These offline tools may access L0 data via the LZSS; L1b, L2+, and instrument calibration data via the ESPC PDA system; and long-term (greater than seven days' worth) data via the CLASS.

Externally Provided Simulators

The Spacecraft All-Software Testbed (SAST) provides an all-software simulation of the satellite for telemetry and command functions. SAST is delivered to the flight project for use by ground system contractor to support development of the Mission Management System and to support mission operations rehearsals, pre-launch test activities, and post-launch updates. The SAST simulates spacecraft command and telemetry packets associated with the L-band and S-band links. The SAST does not model the encoding, randomization, encryption, or RF transfer associated with spacecraft communications subsystem.

The flight-provided hardware in the loop (HWIL) test bed contains a single-sided OBC/ CTP and can accommodate any combination of the following instrument emulators: ABI, GLM, SEISS, SUVI and EXIS. When the instrument emulators are not present, models of the instrument are provided in the Simulation SW Subsystem.

In its role as a Flight Software Development Environment (FSDE) or Flight Software Maintenance Environment (FSME), the HWIL test bed supports the development teams in their integration, test, and verification activities. When used in the SatSim capacity, the HWIL test bed supports spacecraft integration and test (I&T), operations and maintenance (O&M) command procedure verification, crew training, and on-orbit anomaly resolution. The test bed interfaces with the GOES-R series GS at all three sites, and at the spacecraft factory.

GOES Rebroadcast Simulators

The purpose of the GRB simulator is to allow for on-site testing of user ingest and data handling systems at GRB field terminal sites. The unit simulates GRB downlink functionality by generating CCSDS formatted GRB output data based on user-defined scenarios, test patterns, and proxy data files. GRB signals in the GOES-R era will replace the current legacy GVAR signal and will have substantially different characteristics, including a change in data rate from a single 2.1 Mbps stream to two digital streams of 15.5 Mbps each. The GRB simulator is a portable system that outputs a high-fidelity stream of CCSDS formatted GRB packet data equivalent to live GRB data. The data is used for on-site testing of user ingest and data handling systems known as field terminal sites.

The GRB simulator is a fully self-contained system that includes all the hardware and software required for operation. The operator manages configurations to edit preferences, define individual test scenarios, and manage event logs and reports. Simulations are controlled by test scenarios, which are scripts that specify the test data and provide a series of actions for the GRB simulator to perform when generating GRB output. Scenarios allow for the insertion of errors or modification of GRB packet headers for testing purposes. The GRB simulator provides a built-in editor for managing scenarios.

Data output by the simulator is derived from either proxy data files containing L1b or GLM L2+ data, test pattern images, or non-image test pattern generation commands specified from within a scenario. The GRB simulator outputs packets containing both instrument and GRB Information data. Instrument packets contain data simulated from any of the six GOES-R instruments: ABI, SUVI, SEISS, EXIS, GLM, and the Magnetometer. The INFO packets contain information such as satellite operations schedules, status information, orbit state vectors, static unit conversion tables, and static calibration tables.

The GRB simulator provides GRB data as either baseband (digital) or Intermediate Frequency (IF) output to the user ingest and data handling systems. GRB packet data is sent in the same two output streams as used in the operational system: one for Left Hand Circular Polarization (LHCP) and one for Right Hand Circular Polarization (RHCP). Use of circular polarization in the operational system allows the transmitting antenna to multiplex the two digital streams into the same signal, thereby doubling the available bandwidth. The GRB simulator is designed to be used at any site that receives GRB downlink.

The GRB simulator produces a GRB data stream by generating CCSDS formatted GRB packets. The operator can configure the setup and runtime parameters and create scripts for the runtime simulations. The GRB Simulator normal operations include: configuration, scenario, test patterns, and proxy files.

The GRB simulator operates in two modes: online and offline. The online mode is for the actual execution of the GRB simulation whereas the offline mode is for editing and configuration activities performed by the operator. When a simulation is started, the GRB simulator is placed in the online mode. The actual generation and output of the CCSDS formatted GRB packets occur while in online mode. During a simulation, GRB packets are written to a port, making them available to the GRB simulator hardware. A new event log is generated for the currently running simulation each time the GRB simulator is placed in online mode. In offline mode, event log reports may be generated and tasks such as maintaining configurations and scenarios may be performed. Offline functions are not available while the GRB simulator is in online mode. The GRB simulator is placed into offline mode upon termination of a simulation or a user requested stop simulation.

The GRB simulator is packaged in two transit cases. The key components of the GRB simulator include:

- Simulator Processor: hosts the GRB simulator software that produces GRB data and provides an interface for the users
- Front End Processors (FEP): creates Channel Access Data Units (CADU) and sends the transfer frames to the modem
- Modem: outputs the modulated IF signal via Digital Video Broadcasting Satellite Second Generation (DVB-S2) streaming
- Time Code Generator: provides system time to the simulator
- Keyboard, Video and Mouse (KVM) Switch: provides the primary operator interface

ESPC Product Distribution and Access

NESDIS has moved to an enterprise-wide satellite ground processing solution for all NOAA missions. Under the Environmental Satellite Processing and Distribution System (ESPDS) development effort, NESDIS has developed and deployed the ESPC PDA which fulfils GOES-R GS requirements for L1b and L2+ data distribution to authorized ad hoc and subscribed users. PDA provides an integrated solution that includes product distribution and access capabilities for GOES-R, Suomi National Polar-orbiting Partnership (Suomi NPP), Joint Polar Satellite System (JPSS), and Legacy operations, as well as future NOAA and non-NOAA satellite systems. Figure 16-9 shows the GOES-R and PDA systems in the context of the broader ESPC architecture. While the PDA system is not physically part of the GOES-R series GS, it is tightly integrated with it to meet GOES-R series delivery requirements to users.

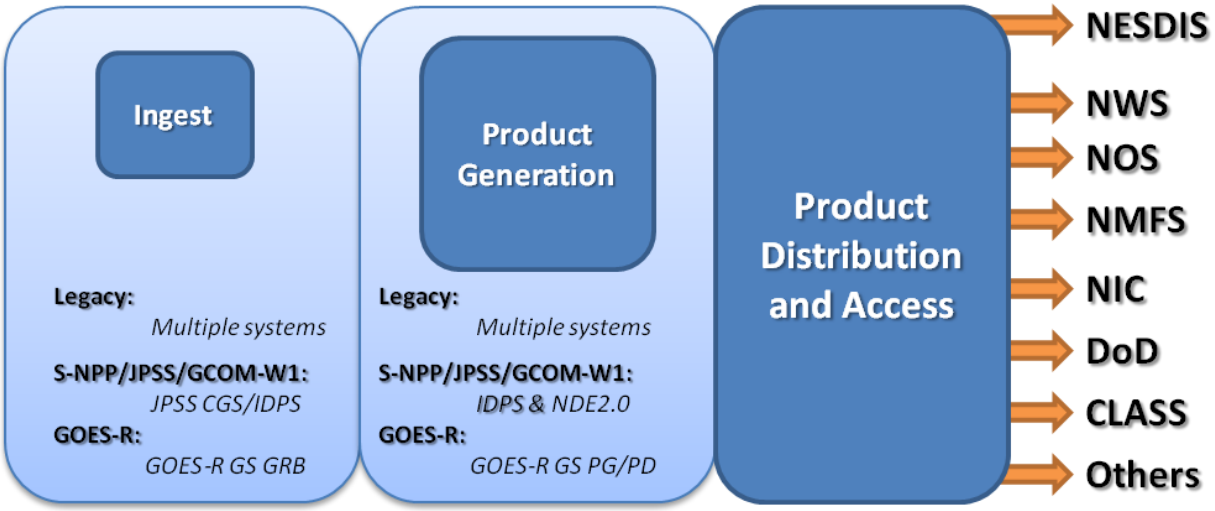

Figure 16-9. PDA's Role in the ESPC Enterprise at NSOF

The new ESPC PDA system serves as a unified provider of NOAA's satellite data and product offerings. A single system intakes and distributes products for real-time users, receiving inbound product files from multiple product generation systems, and enabling distribution to all registered ESPC users. The PDA development provides a web portal to end-users of NOAA's real-time satellite product offerings, including GOES-R. End users are able to search for and order satellite products, via ad hoc requests or subscriptions. The future system will also provide a single interface for product generation system operators to subscribe to and receive ancillary data files. PDA is estimated to make available 30 TB of daily product volume by 2020 from 10 different data sources, including GOES-R.

17. Spacecraft Mission Phases

To reach the required on-station location in geostationary orbit (station acquisition), the GOES-R series spacecraft undergo four distinct mission phases:

- Launch/Ascent— From Atlas V 541 lift-off to satellite separation
- Liquid Apogee Engine (LAE) burns: Series of 5 LAE burns to raise perigee and reduce inclination to near geosynchronous orbit
- Station Acquisition: Hydrazine Bi-Propellant Thruster (HBT) drift stop maneuvers with station acquisition at PLT longitude
- Post Launch Test and on station performance testing of the payloads to initial operations

Ground Stations

Various ground centers and tracking stations are involved throughout the mission phases:

- Universal Space Network (USN) stations at Dongara, South Point, and Hartebeesthoek
- Diego Garcia Station (DGS), an Air Force remote tracking station
- WCDA station located at Wallops, VA
- CBU in Fairmont WV

Launch/Ascent Phase

The GOES-R series spacecraft are launched from Cape Canaveral Air Force Station Space Launch Complex 41 by a United Launch Alliance (ULA) Atlas V 541 rocket.

Figure 17-1. GOES-R (now GOES-16) aboard a ULA Atlas V 541 rocket at Cape Canaveral Air Force Station's Space Launch Complex 41.

The Atlas V 541 ascent trajectory utilizes a three Centaur burn extended coast mission profile. The first Centaur burn achieves a parking orbit. The second Centaur burn achieves an interim orbit. There is then an extended coast (current baseline is 2.75 hours from Main Engine Cutoff (MECO) 2 to Main Engine Start (MES) 3) with the third Centaur burn achieving the Geosynchronous Transfer Orbit (GTO). Figure 17-3 provides an overview of the ascent profile.

Atlas/Centaur performance increases as the extended coast duration increases. There is a requirement for upper stage disposal 500 km below GEO. Normally, the longer the extended coast and the closer separation is to apogee, the harder it is for Centaur to maneuver to the disposal orbit. For the GOES-R series trajectory design, the Atlas/Centaur is targeting satellite separation for 500 km below GEO. This provides for the ability for the launch vehicle (LV) to maximize the extended coast performance improvement. The satellite raises the 500 km low orbit during the HBT station acquisition phase.

Figure 17-2. GOES-R (now GOES-16) lifted off at 6:42 p.m. EST on November 19, 2016 from Cape Canaveral Air Force Station's Space Launch Complex 41, aboard a United Launch Alliance Atlas V 541 Rocket

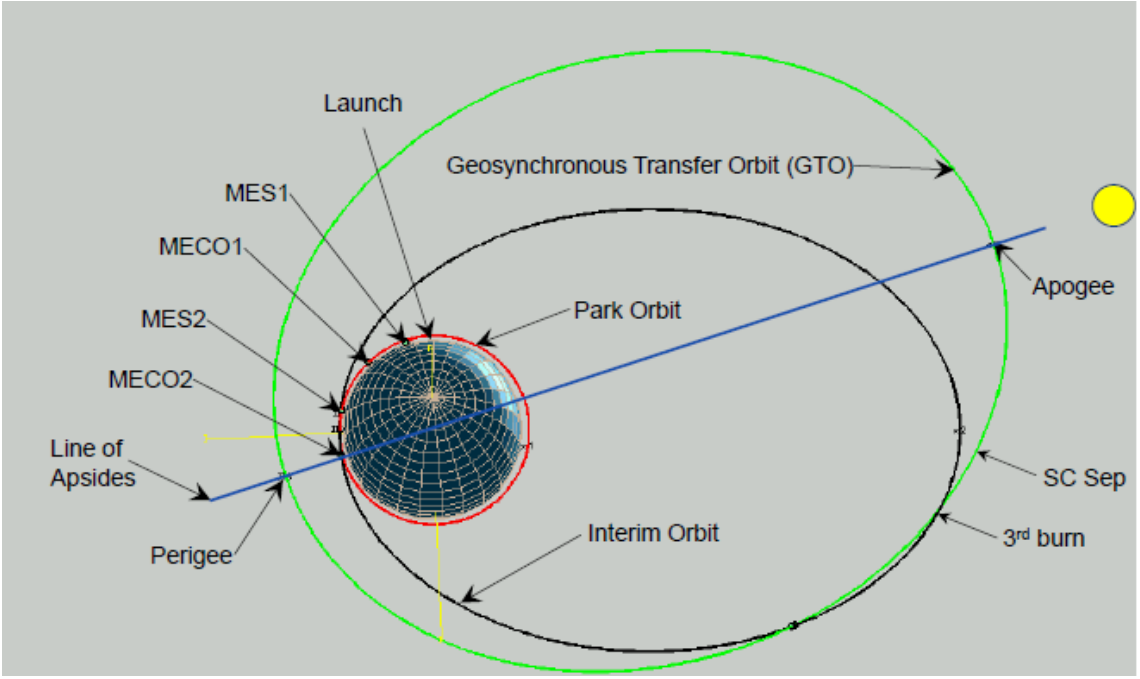

Figure 17-3. Overview of the Ascent Phase Profile

LAE Burn Targeting

A robust LAE burn plan has been developed for the GOES-R series that meets the constraints and addresses the unique LV targeting on GOES-R spacecraft. Given the separated mass of the GOES-R series spacecraft, five LAE burns are required for orbit raising. The driving constraint for the LAE burn plan is the PLT longitude at 89.5° W. The secondary driver for the LAE burn plan is the LV GTO. This orbit drives the target for the last LAE burn.

The LV GTO drives the drift stop maneuver plan and also the targeting of the last LAE burn. The injection apogee altitude of 500 km below GEO stays relatively constant during orbit raising. The post-LAE 5 perigee altitude is targeted 60 km below GEO for collision avoidance (COLA) mitigation. The resulting post-LAE 5 drift rate is 3.6° E/rev. This is a relatively large drift rate. Typically LAE burn plans are targeted approximately 1.5-2° W of the PLT longitude with a post-last LAE drift rate of approximately 0.6°/rev. For the GOES-R series spacecraft, with a larger post-last LAE drift rate of 3.6°/rev, the last LAE longitude offset is increased. The drift stop maneuver plan was actually developed first in order to define the longitude offset required for the last LAE burn. There is a four HBT burn drift stop maneuver plan which requires a longitude offset for the last LAE burn of 10.3°. Therefore, the last LAE is targeted at 260.2°E/99.8°W (10.3°W of 89.5°W PLT longitude).

With the last LAE burn determined, the first four LAE burns can be targeted. Apogee 3 is chosen as the first LAE burn apogee to provide the necessary two revs from satellite separation for Orbit Determination (OD) and maneuver planning. The resultant LAE 1 longitude of 99.0°E provides good dual station coverage from Diego Garcia and Dongara. A relatively large 40.8 minute maneuver is planned, in part to maintain LAE burns 2 and 3 below the 50 minute burn limit. Any

performance dispersions in this first LAE can be readily accommodated in planning the next four LAE burns. The LAE 2 longitude of 61.2°E at apogee 5 provides two revs between maneuvers and provides solid tracking station coverage from Diego Garcia, Dongara, and Hartebeethsoek. The 47.8 minute LAE 2 burn duration is comfortably under the 50 minute burn constraint imposed by propulsion. The resultant LAE 3 burn longitude of 331.4°E at apogee 7 again provides two revs between maneuvers and dual tracking station coverage from Santiago and Hartebeethsoek. The 48.5 minute LAE 3 burn duration is again comfortably under the 50 minute limit. The resultant LAE 4 longitude of 157.4° E at apogee 9 again provides two revs between maneuvers and provides dual tracking station coverage from Dongara and South Point, Hawaii. A lower duration maneuver time of 30.7 minutes provides a lower 206.5 m/sec ΔV which lowers the burn dispersion magnitude which in turn provides more accuracy in targeting the final LAE 5 burn longitude. A drift rate target of 51.4° is chosen as a divisor of 360° such that for a missed LAE 4 contingency, the spacecraft will return to the LAE 4 burn longitude in 7 revolutions.

Finally, the final LAE 5 burn longitude of 260.2°E at apogee 11 is targeted based on the station acquisition plan. The 24.3 minute maneuver duration imparts a ΔV of 173.7 m/sec which provides higher maneuver accuracy for meeting the drift rate target of 3.6 °E/rev. There is a 6.8 day mission duration from satellite separation to the last LAE 5 burn.

Additionally, the LAE burn longitudes are targeted at gaps in the GEO belt per standard practice to mitigate potential collision avoidance conjunctions with GEO satellites. Given the 500 km below GEO apogee, COLA at GEO is mitigated on GOES-R. Conjunction analysis will be performed by GSFC Flight Dynamics during the LOR period. Targeting the LAE burns for gaps in the GEO belt also minimizes Radio Frequency Interface (RFI) issues. Table 17-1 and Table 17-2 provides a summary of the nominal LAE burn plan with information on targeting and optimization.

The complete GOES-R nominal LAE burn plan is shown below in Table 17-1 and Table 17-2.

Table 17-1 LAE Burn Plan

Event	Apse	Longitude (°E)	Drift Rate (°E/rev)	ΔV (m/s)	LAE Dur. (min)	Station
Injection	Apogee 1	106.2	176.4	-	-	Dongara/Diego Garcia
LAE 1	Apogee 3	99.0	161.1	215.3	40.8	Dongara/Diego Garcia
LAE 2	Apogee 5	61.2	135.1	272.0	47.8	Dongara/Diego Garcia
LAE 3	Apogee 7	331.4	93.0	301.8	48.5	Santiago/Hartebeethsoek
LAE 4	Apogee 9	157.4	51.40	206.5	30.7	Dongara/South Point
LAE 5	Apogee 11	260.2	3.58	173.7	24.3	Wallops/White Sands
Nominal time until last LAE burn and start of deployments: 6.8 days						
Nominal time until arrival at PLT longitude: 11.8 days						

Table 17-2 LAE Burn Plan

Orbit	Perigee Radius (km)	Apogee Radius (km)	Semi-Major Axis (km)	Eccentricity	Inclination (°)	Period (hrs)
Injection	12167.0	41664.2	26915.6	0.54796	12.9	12.2
LAE 1	15115.8	41664.2	28390.0	0.46757	9.6	13.2
LAE 2	19962.0	41664.2	30813.1	0.35216	6.2	15.0
LAE 3	27430.8	41664.2	34547.5	0.20600	3.1	17.8
LAE 4	34433.1	41664.2	38048.7	0.09502	1.3	20.5
LAE 5	42104.2	41664.2	41884.2	0.00525	0.0	23.7
Final	42164.2	42164.2	42164.2	0.00000	0.0	23.9

HBT Station Acquisition Targeting

The HBTs are used after the LAE burns to raise the orbit to GEO and stop the drift rate at the 89.5°W PLT longitude. Station acquisition is also used to describe the post-LAE drift stop maneuver sequence. The LV GTO drives the drift stop maneuver plan based on the 500 km low apogee altitude. A one and a half day duration between the last LAE 5 and HBT 1 is chosen for time for a good OD and for satellite deployments. HBT maneuvers are performed in the deployed configuration. Four HBT maneuvers provide a robust plan with good flexibility and orbit/drift control. The LAE maneuvers take out all the inclination and therefore the HBT drift stop maneuvers are all positive in-track maneuvers. Approximately five days are required to stop the drift at the PLT longitude.

Satellite Separation Attitude

The satellite separation attitude is optimized to provide both adequate sun angle on the outboard panel of the stowed solar array and adequate coverage from the +Z hemispheric (hemi) antenna. The hemi antenna is used at satellite separation. After solar array stage 1 deployment the satellite goes into Sun Search Mode and is oriented in a sun coning attitude nominally at satellite separation + 45 min, and the hemi antenna is still used. Subsequently, a ground command sets the satellite to the cruise attitude where the bi-cone antenna is used. The satellite separation attitude needs to be rotated from normal to the sun for the outboard solar array due to hemi antenna pattern interference/nulling in the satellite XY plane.

Launch and Orbit Raising Cruise / Orbit Raising Attitude

The bi-cone antenna is used for launch and orbit raising (LOR) operations after satellite separation, Solar Array stage 1 deployment, and sun coning, all of which use the hemi antenna. The transition from the hemi antenna to the bi-cone antenna occurs after the satellite attains sun coning attitude nominally at satellite separation + 45 min and before commanding the satellite to slew to the LOR cruise attitude. The LOR cruise / orbit raising attitude is optimized based on blockage of the bi-cone antenna by both the ABI and GLM instruments and for SUVI sun angle constraints.

LOR Tracking Station Network and Contacts

For LOR activities, GOES-R has the following tracking station options:

- South Point, Hawaii (USN) 204.3°E (155.7°W)
- White Sands 253.4°E (106.6°W)
- Wallops (Ground Network) 284.5°E (75.5°W)
- Santiago, Chile (GN) 289.3°E (70.7°W)
- Hartebeesthoek, South Africa (USN) 27.7°E
- Diego Garcia (Air Force Satellite Control Network (AFSCN)) 72.4°E
- Dongara, Australia (USN) 115.3°E
- Singapore (Kongsberg (KSAT)) 103.0°E
- Hanger AE/KSC (ORTT&C 1K data will originate from here until separation)

Post Launch Test

After the engineering handover is complete, post launch test begins, and the spacecraft is checked for proper performance before entering service at either of two assigned locations. At the 89.5 W checkout station, the orbit apogee and perigee radii will be at the geosynchronous radius of 42,164 km. By international agreement for the GOES system, two spacecraft orbital positions have been assigned: 75° and 137° West longitudes (the latter is a shift from previous GOES at 135^0 W in order to eliminate conflicts with other satellite systems). From these two vantage points, roughly over Ecuador and the Marquesas Islands, respectively, the GOES-R series instruments cover both the Atlantic and Pacific oceans.

The major operations performed upon station acquisition are:

- Outgas instrument contaminants
- Activate and checkout communications payload data services
- Deploy instrument cooler covers
- Activate space environment monitor equipment
- Characterize and optimize instrument radiometric performance
- Activate and evaluate image navigation and registration
- Enter storage mode or begin on-station operations

18. On-Orbit Mission Operations

Each spacecraft in the GOES-R series is designed for 10 years of on-orbit operation preceded by up to five years of on-orbit storage. This section concerns itself only with the active science data collection aspect of the on-orbit mission. On-orbit operations consist of daily (routine) and periodic operations, both of which are planned in advance and executed as per the operations schedule. Routine operations driven by the on-board schedule include instrument commanding and one housekeeping period (for clock adjustments and momentum dumping) with the spacecraft on-board systems controlling the spacecraft attitude, systems monitoring, and maintaining general operations and health monitoring.

Mission Operations

The GOES-R series system is a critical national resource that requires the highest level of mission operations support, utilizing mission operations best-practices, rigorous engineering configuration management, and extensive development and testing of normal and contingency operations procedures.

Console operations are continuously staffed at the NSOF. Operators ensure proper execution of all satellite commanding, monitor the performance of the satellite and ground segment, and respond to any real time request or anomaly. Operators can also remotely monitor the status of WCDAS elements and CBU functions, and configure those resources as required.

Spacecraft engineering ensures spacecraft health and safety and maintain a continuous flow of high quality mission data. This support includes performance analysis and long-term trending of all spacecraft subsystems, INR analysis and operations, anomaly investigation and resolution, maneuver planning and execution, and engineering procedure and database development and maintenance. Satellite and operations procedure development may utilize OTS systems for development and configuration management.

Instrument engineering monitors instrument performance and detect, diagnose and resolve instrument anomalies. Instrument performance analysis evaluates significant instrument performance parameters, analyzing short and long term trends, archiving all pertinent data for future use, and performing statistical analysis of data pertaining to instrument radiometric calibration and performance. Activities include assistance in resolving product data anomalies, quantitative monitoring of product data at Level 0 and Level 1, and providing information to support data calibration activities to maintain the highest quality products on a continuous basis.

Normal Operations: Day in the Life

A typical day in the life of GOES-R series satellite operations includes a maneuver, or some combination of maneuvers, plus interactions with the on-board file system. Each day's maneuver plan consists of either a stand-alone MA, an MA and an EWSK maneuver, or a NSSK maneuver immediately preceded and followed by MA maneuvers. In addition to the planned maneuver, each operations day includes uplink and downlink of files to/from the on-board file system.

These interactions include:

- Loading and activating a new 7-Day Absolute Time Sequence (ATS) – this file is updated daily and includes all planned commands for the next seven days (in compliance with requirement of seven days of autonomous operations). The new file can be uploaded at any time of the day and is activated at the start of each day.
- Loading and dumping the 7-Day Target Star Table for ABI
- In addition, some other files are updated and uploaded on a weekly basis, including:
    - the backup ephemeris file, which is used if contact is lost with the GPS constellation
    - the Earth Orientation Prediction Parameters (EOPP) file, needed for the UT1 time updates used in some GN&C algorithms.

Instrument operations are integrated with spacecraft operations in the 7-Day ATS. There are a variety of typically planned instrument operations that require commanding on a daily, weekly, and less frequent basis. Figure 18-1 presents an example of a typical operations day in the life – showing a day with planned MA and EWSK maneuvers, while Figure 18-2 shows activities on a typical NSSK day.

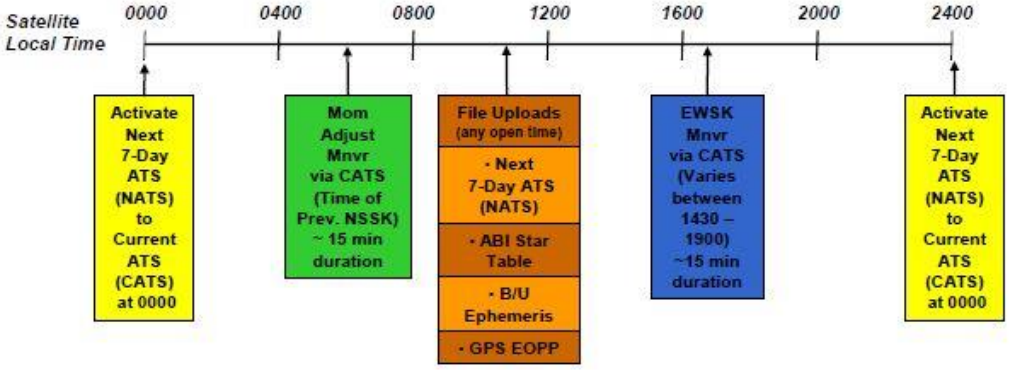

Figure 18-1. Typical Day in the Life – Operations Activities (EWSK Day)

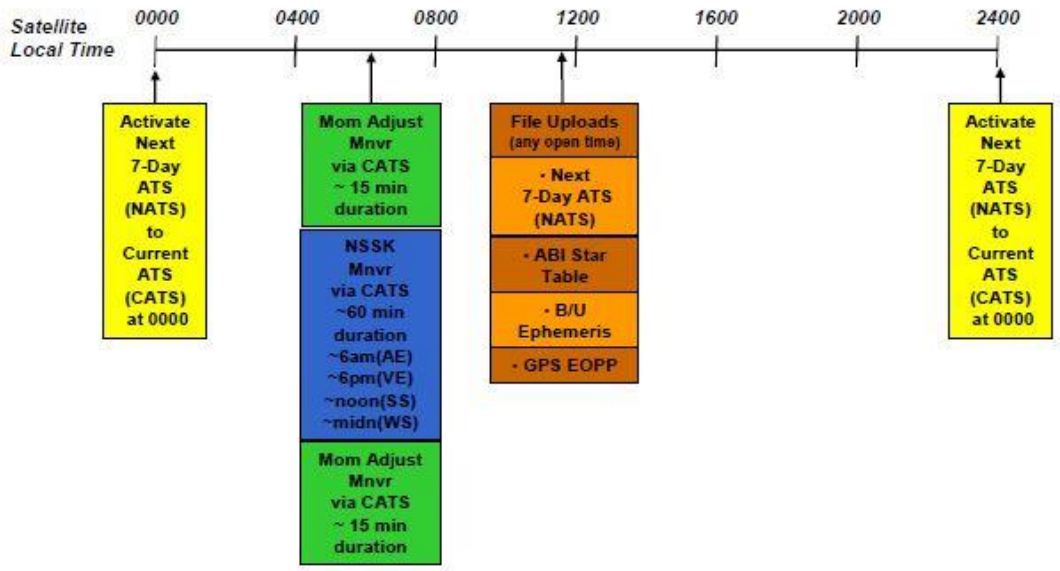

Figure 18-2. Typical Day in the Life – Operations Activities (NSSK Day)

Normal Operations: Week in the Life

Normal Operations of the GOES-R series satellites are typically planned over a week long timeframe and implemented via a 7-day ATS that contains all planned commanding for the next 7 days, with a new ATS uploaded and initiated every day. Spacecraft and instrument commanding is combined into a single ATS. A constraint checker within the ground system Mission and Planning System is used to ensure that there are no conflicts in the uploaded sequences. The 7-day sequence is stored within the Stored Command Processing (SCP) Computer Software Component (CSC). The SCP CSC resides in the OBC FSW that executes on the RAD750.

In addition to the typical daily operations, the station keeping and momentum adjust maneuvers are planned via the 7-day ATS according to a 4-day repeating cycle. Figure 18-3 shows a typical schedule for satellite maneuvers over a weekly period.

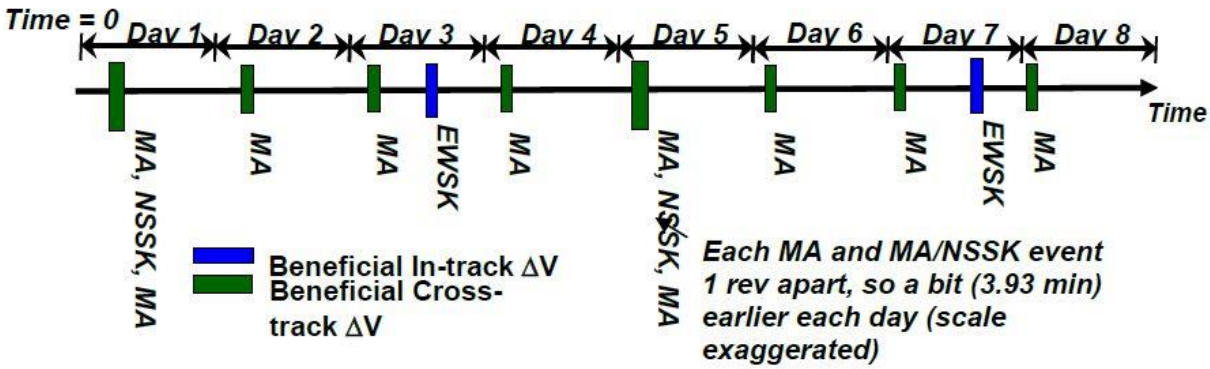

Figure 18-3. Typical Seven Day Maneuver Schedule

Normal Operations: Year in the Life

In addition to the tasks that are repeated on a daily or weekly timeframe, there are also recurring tasks that need to be performed on a less frequent basis ranging from monthly to quarterly to on an annual basis. Spacecraft bus tasks required on this less frequent basis include a monthly update of predicted vehicle center of gravity (CG) location and an annual repeat of the IMU to star tracker calibration (with maneuvers about each vehicle axis) which keeps the IMU scale factor within required limits. Flushing of the HBT thrusters is also required infrequently (~ every 239 days) via a 1-2 sec thruster burn. This flushing burn limits the build-up of ferric nitrate in the HBT valves. Battery charging parameters are also modified on an annual basis. The End of Charge Voltage (EOCV) is increased by 0.01V each year to account for fade and increasing depth of discharge (due to less solar array power available to support NSSK power needs).

In addition to the needs of the spacecraft bus, there are a number of instrument calibrations that are required on a less frequent basis. These calibrations can be grouped into those that do not require any spacecraft bus operational changes, and those that do require bus operational support (specifically temporary off-pointing of the SAWA and SPP from the sun).
Instrument calibrations without spacecraft bus operations include:

- ABI Scan Encoder Calibration (every 1-2 months)
- ABI Blackbody and Spacelook Calibrations (as needed)
- ABI Star Catalog Update (~ twice over mission life)
- EXIS Calibration Sequence (quarterly): EUVS: A/B/C Dark, A/B/C Flat Fields, A/B Gain Calibrations (filter comparisons)
- Magnetometer Electronic Calibrations (as needed)

SUVI and EXIS calibrations that require off-pointing of both the SAWA and the SPP from the sun are:

- EXIS Calibration Sequence (quarterly) – includes XRS, EUVS, and SPS calibrations
- SUVI Off sun Calibrations (quarterly) – Flat-Fielding/Vignetting, Guide Telescope to Science, Telescope Cross Calibration, Light Transfer Curves

There are also a number of operations that occur very infrequently (once or twice over mission life) such as star tracker star catalog updates, propulsion system repressurization, and EEPROM refreshes.

Instrument Operations

ABI and SUVI can operate autonomously using programmable internal schedules, or, interactively in response to a command sequence. Autonomous operations may be enabled, disabled, or interrupted by command. GLM, SEISS, EXIS and MAG operate autonomously without the need for frequent uploads or calibration commands.

In addition to their Normal Operating Modes, all of the GOES-R series instruments support “Instrument Diagnostic” and “Health and Safety” modes, including an autonomous “SAFE” mode. The GOES-R series instruments are designed to execute transitions between modes in such a manner as to prevent damage to the instrument, and will report the present operating mode for

each instrument in the housekeeping telemetry for that instrument. Housekeeping telemetry is transmitted in all powered instrument modes.

Flight Software for the instruments is reprogrammable on orbit, and Computer Software Units (object code modules) are usable immediately after upload, without restart of the internal computer, or requiring completion of the entire software package upload. All on-board memory may be dumped to the ground system on command without disturbing normal operations of instrument data processing.

ABI Operations

The ABI collects Earth scene data swath by swath in an east/west direction and builds the image from successive swaths in a north/south direction. ABI is able to scan across the sun at its normal scan rate two times within 30 seconds or less without interrupting normal imaging operations or sustaining damage, although performance may be degraded. While in Normal Operating Mode, the ABI concurrently acquires all secondary observations required to meet radiometric and INR requirements within the scan period allocated for primary imaging. When star-sensing is active, the scan pattern is autonomously adjusted to perform the necessary acquisition.

Integral parts of each scan mode are space and blackbody calibrations needed to meet radiometric performance requirements. These calibrations are included in the allocated time for each. It is planned that all instruments will operate concurrently and continuously with minimal downtime for housekeeping operations. ABI exploits the “operate-through” capability of the spacecraft bus for continuous imaging within specification during housekeeping activities and orbit maneuvers.

No special “keep-out-zone” commanding is required for sun or moon avoidance in normal operations. ABI is capable of scanning across the Earth limb with the sun present in the FOV at the normal scan rate without damage, but onboard software will prevent direct sun impingement during normal imaging operations with minimal loss of image data. Solar and lunar exclusion zones for star looks and space-look calibrations are automatically computed by the ABI flight software using onboard spacecraft ephemeris data.

GLM Operations

During nominal operations, the GLM requires no commanding from the ground. When the instrument is in NORMAL mode, valid science data is linked to the ground, and processed through the ground processing algorithms. The resulting navigated lighting events are provided to higher level processing to produce the lightning weather data products. So a typical day includes no commands to the instrument; housekeeping and engineering telemetry are continuously generated; and science telemetry is autonomously generated according to the lightning activity on the earth.

For the GLM, much of the raw data processing occurs on the ground (GLM raw data downlink rate is approximately 7.5 Mbps). On-orbit operational requirements are very limited for the GLM. Detector navigation is performed on the ground using spacecraft bus attitude solutions. No routine on-orbit calibrations are required. A large portion of the raw data processing involves the discrimination of true lightning events from detector stimulation produced by charged particles,

surface glint, or electronic noise-induced events. The flash false alarm probability is less than 5% after processing.

Some operational characteristics of the GLM are:

- Continuous operation through eclipse periods
- Withstands sun in the field-of-view indefinitely without damage
- Autonomous background imaging (intensity of every detector element) once every 5 minutes, or upon ground command

GLM data reported for each lightning event will include geolocation of the event to 5 km accuracy, intensity of the detected event, time of the event to an accuracy of 500 microseconds, and the identification of the imager pixel that detected the event. Lightning events can be overlaid onto ABI imagery (via ground processing) and the GLM instrument takes background images every 150 seconds.

Space Weather and Solar Imaging Operations

The SUVI, EXIS, SEISS, and MAG operate and transmit data during eclipses and stationkeeping maneuvers. Each operates independently of the other instruments on the spacecraft bus. All instruments observe simultaneously and do not invoke different observing modes. It is possible that the SEISS and MAG instruments may be operational during on-orbit storage to collect space environmental data from the storage location. This function will depend on the storage mode attitude control mode and the downlink antenna geometry.

SEISS, SUVI, and EXIS calibrations vary by instrument. The solar-pointing instruments require periodic (no more than 4 times per year) off-pointing from the sun by up to 15 degrees to measure background. Sequential orthogonal slews across the solar disk (cruciform slews) are required for the SUVI and EXIS instruments, but these activities can be combined into a unified operation for the SPP suite and are required no more than four times per year. Initial on-orbit calibration of the magnetometer instrument offset bias (instrument plus spacecraft) required successive large-angle (multi-rev) spacecraft rotation maneuvers. The Magnetometer offset determination was a one-time calibration maneuver involving large angle attitude slews performed during the spacecraft post-launch test period in the vicinity of local noon.

Like the GLM, the SUVI, EXIS and SEISS instruments require no commanding from the ground during nominal operations, but save for the infrequent solar off-pointing calibration maneuvers. The instruments should require minimal operational resources.

Housekeeping Operations

Housekeeping operations are activities occurring on a regular basis for maintenance of satellite functions. Examples of routine housekeeping activities include momentum management, clock maintenance, memory dumps or other onboard processor management, or subsystem reconfigurations not covered by onboard autonomy. Any periodic instrument calibration, such as SUVI/EXIS platform off-pointing or MAG calibration sequence commanding, is scheduled as a housekeeping activity. Station keeping management requirements are met using frequent incremental delta-v maneuvers. Any housekeeping activity not controlled autonomously onboard is planned by the scheduling function. Daily “outage” periods to accomplish housekeeping functions are not specified for GOES-R. Stringent total yearly outage requirements drive all

routine housekeeping activities to be accomplished without interruption in instrument data collection or relaxation of performance specifications.

Special Operations

Special operations are activities not occurring during the course of daily routine operations and are associated with a higher level of risk than routine operations. Typically, special operations activities are supported by engineering staff and managed using prescribed operational procedures. Activities with a high degree of complexity and risk, such as non-routine attitude or orbit maneuvers, also require significant preparation. This preparation includes all associated planning and scheduling, detailed sequence of events (SOE) review, contingency planning, and SOE validation and crew rehearsals via high-fidelity spacecraft simulation. Special operations may include station keeping or station change maneuvers, spacecraft subsystem or instrument configuration changes, transition to storage mode, or special instrument calibrations or diagnostics.

Anomaly Operations

Satellite anomaly operations will occur when the spacecraft bus or instruments experience a failure or degradation in function or performance that affects normal data collection, or otherwise compromises the health and safety of the satellite system. Anomalies could be sudden, discrete events, such as the failure of a critical component, or could be a gradual degradation in performance detected by engineering trending that permits action prior to the occurrence of a mission-threatening situation. Onboard failure detection and correction will respond autonomously to spacecraft and instrument anomalies in many cases, but it is the responsibility of real time operators to respond to any contingency situation in accordance with pre-defined procedures. Mission operations engineering will receive notification of any actual or suspected satellite anomaly through either operator contact or automated ground system functionality. Engineering support will respond in near real time when required. The remote access system will enhance anomaly response by allowing engineers who may be off-site to acquire and analyze satellite telemetry expediently. All anomaly investigations and corrective actions will be thoroughly documented in reports and managed under document configuration control to ensure that the knowledge base is maintained throughout the program lifetime.

For serious spacecraft attitude control or other subsystem anomalies, a key feature of maintaining health and safety is the use of the Safe Hold Mode (SHM), which permits automated acquisition and long term attitude control of the satellite in a power-positive and thermally safe condition while maintaining ground communication. Entry into SHM may be triggered by an event or condition detected autonomously onboard, or it may be commanded manually based on engineering assessment of a failure or degraded condition. Recovery to normal Earth-pointing or storage mode attitude from SHM would involve significant planning and engineering preparation.

Although flight system anomalies present the greatest threat to mission health and safety, ground segment anomalies traditionally comprise the great majority of interruptions in product data flow. Ground anomalies are analogous to satellite anomalies in that autonomous failure detection and isolation is performed by the Enterprise Management function, but operators are still responsible for ensuring proper correction of any system fault. Ground system engineers will respond similarly to spacecraft engineers in the event of a significant problem.

Spacecraft autonomous capabilities

The spacecraft bus has autonomous fault detection and correction capability, enabling it to survive the occurrence of any credible single component failure or processor upset. Onboard autonomy drive many aspects of the operational procedures. The spacecraft is capable of executing stored command sequences and table loads that permit up to seven days of autonomous operation without ground interaction. The spacecraft bus performs uninterrupted image data collection during stationkeeping maneuvers. The spacecraft bus has sun-positive safehold mode. The spacecraft flight software has telemetry points that are modifiable on-orbit. The flight software is able to be uploaded without disrupting normal processor or spacecraft operations.

Image Navigation and Registration (INR)

Image Navigation and Registration is a set of image quality metrics pertaining to the location errors of Earth-referenced instrument pixels in Level-1b data. Navigation is absolute pixel location accuracy, and the various registration requirements specify relative pixel location accuracy. Within frame registration and line-to-line registration are relative pixel-to-pixel location errors within a single frame. These errors result in image distortion and shear within a single image. Frame-to-frame registration is the relative motion of a given pixel in sequential frames. This error produces jumps when successive images are looped. Channel-to-channel registration is the offset between spectral channels for a given pixel location. These errors affect multi-spectral products derived from raw imagery.

INR requirements are met through a coordination of all elements of the end-to-end system; the instruments, spacecraft, and ground processing system. INR processing will utilize precision onboard orbit solutions, star measurements made by the instrument, and spacecraft attitude and angular rate measurements together with ground-based resampling techniques to locate each pixel in a fixed-grid reference. Responsibility for meeting INR requirements, from photon collection through generation of Level 1b data, is placed on the instrument contractors (working to spacecraft-to-instrument interface pointing requirements met by the spacecraft manufacturer). This represents a departure from previous GOES series, in which INR was performed by the prime contractor (GOES I–M) and the spacecraft contractor (GOES N–P).

Image navigation for the SUVI involves all the spacecraft bus pointing considerations of the ABI, but with the additional complications of solar array platform-to-body dynamic interactions. Body-fixed instruments such as the SEISS and MAG are navigated via simple coordinate transformations using the spacecraft bus attitude estimate.

Yaw Flip

The GOES-R series was designed to not require semi-annual yaw-flip (180 degree rotation about the nadir axis) maneuvers, although the capability to perform such maneuvers exist. The yaw flip maneuver may increase seasonal radiometric performance. The instrument designs are not dependent on a semi-annual yaw flip maneuver. If the need to perform a yaw flip arises, the GOES-R series will not perform imaging during Yaw flip maneuvers and will recover and commence imaging within a prescribed period of time. The cumulative time that imaging is interrupted due to all momentum management, stationkeeping, and yaw flip maneuvers will be under 120 minutes/year. This is compared to 3650 minutes/year for momentum management alone on the GOES-N series.

Station Relocation

The longitude station of a satellite may be changed several times over the duration of the mission. Station relocation will occur, for instance, when a satellite is “drifted” from the 89.5 W check-out location to the 105 W storage location or when a satellite is moved from the storage location into one of the operational stations. A satellite may also be relocated from an operational station at the end of its operational mission for other use before it is decommissioned. Emergency station relocation may be required to replace a failed operational satellite and meet availability requirements. Station relocation maneuvers are initiated by applying an east/west delta-v at an apsis to raise or lower the semi-major axis and induce a “drift” rate in geosynchronous longitude. When the desired station is approached, a roughly equal and opposite delta-v at the same apsis re-circularizes the orbit at the new location and stops the drift. The GOES-R series spacecraft will be capable of up to 2 emergency station relocation maneuvers at a longitude drift rate of 3 degrees/day, and 3 drift maneuvers at a drift rate of 1 degree/day. INR specifications will be maintained at the 1 degree/day drift rate. However, downlink of X-band frequencies during the station drift may be restricted, so that imaging may not be possible during station relocation and no INR specifications may be applicable.

Station relocation events include the following:

- From checkout location to an on-orbit storage location at a minimum of 1 degree/day shift
- From the on-orbit storage location to the operational station location at a minimum of 1 degree/day shift
- Three changes of operational station location while meeting Attitude Control System pointing performance specifications at a minimum of 1 degree/day shift
- Two emergency relocations at a minimum of 3 degrees/day shift

From the operational station location to end-of-life longitude at a minimum of 1 degree/day shift.

Eclipse Operations

The GOES-R series spacecraft are designed to support full operations through the maximum geosynchronous eclipse duration of 72 minutes. All instruments are capable of continuous operation through eclipse. Consequently, no special operations should be required to accomplish the daily eclipse entry and exits, with the possible exception of commanding to accomplish battery charge management. Seasonal reconfigurations such as for the thermal and electrical power subsystems may be required, but should not significantly affect operations.

Leap Second Adjustments

In the event that the Coordinated Universal Time (UTC) is adjusted for a leap second, both GOES spacecraft will be placed into a special housekeeping period at 0000 GMT on the day of the leap second. A clock adjustment will be performed to compensate for this change in UTC over the duration of the housekeeping period. Upon exit of the housekeeping period, the onboard clock will be synchronized with UTC within specifications.

De-Orbit

The deactivation phase occurs when a satellite is declared to be incapable of providing useful mission data or other services and requires disposal to meet international guidelines for the

stewardship of geosynchronous resources. This phase includes all mission planning and execution to boost the satellite to a supersynchronous orbit with a perigee no less than 300 km above geosynchronous altitude. This operation is also referred to as “de-orbit”. Following orbit boost, propellant is depleted to the greatest extent possible and all systems are deactivated so that no spurious RF is radiated and the probability of vehicle break-up is minimized. All deactivation activities are accomplished by NOAA operations, with planning support from the GOES-R series program.

19. Technical Performance Summary

This section summarizes the typical and nominal capabilities of the GOES-R series system unless otherwise stated. The numbers quoted do not necessarily represent worst case parameter values for all extreme conditions in special modes.

Spacecraft Dimensions

Height	6129.27 mm (241.31 in)
Width	3879.60 mm (152.74 in)
Depth	2687.57 mm (105.81 in)

GOES-R Subsystem	Mass (kg)
Spacecraft Structure	607.82
Thermal Control	135.85
Mechanisms	108.67
GN&C	161.45
C&DH	84.40
TT&C RF	17.36
Propulsion	206.22
Power	335.78
Harness	302.00
Bus Harness	163.82
Payload Harness	138.18
Comm	134.69
Antenna	84.42
Instruments	627.54

			mm			kg-M^2			kg-M^2	
	Mass (kg)	**X-cg**	**Y-cg**	**Z-cg**	**Ixx**	**Iyy**	**Izz**	**Pxy**	**Pxz**	**Pyz**
LIFTOFF	5191.64	-54.5	23.4	1886.9	8345.7	8557.5	3987.7	-94.4	-26.6	120.2
Hydrazine	1627.7	0	0	1786.1	686.5	686.5	31.8	0	0	0
Oxidizer	699.7	0	0	1358.5	55.4	468.5	418	0	0	0
East Ox	349.85	768.4	0	1358.5	27.7	27.7	2.5	0	0	0
West Ox	349.85	-768.4	0	1358.5	27.7	27.7	2.5	0	0	0
Pressurant	6.9	-0.7	0	263	1.4	0.9	0.8	0	0	0
PRELAE	5191.53	11.5	20.9	1933.4	8311.8	10604.7	6002.2	310.7	7.7	113.7
Hydrazine	1627.58	0	0	1851.9	781	781	32.9	0	0	0
Oxidizer	699.7	0	0	1549.7	103.9	516.9	419.1	0	0	0
East Ox	349.85	768.4	0	1549.7	51.9	51.9	3	0	0	0
West Ox	349.85	-768.4	0	1549.7	51.9	51.9	3	0	0	0
Pressurant	6.9	-0.7	0	329.4	1.9	1.6	0.8	0	0	0
POSTLAE	3765.94	15.9	28.8	1994.5	7834.1	9736.9	5595.3	310.2	4	107.1
Hydrazine	865.35	0	0	1776.6	466.1	466.1	24.2	0	0	0
Oxidizer	36.35	0	0	827.5	13.5	35	21.6	0	0	0
East Ox	18.17	768.3	0	827.5	6.8	6.8	0.1	0	0	0
West Ox	18.17	-768.3	0	827.5	6.8	6.8	0.1	0	0	0
Pressurant	6.9	-0.3	0	1024.9	4.5	5.1	1.2	0	0	0

Mass Properties at End Of:

		mm			kg-M^2			kg-M^2		
	Mass (kg)	**X-cg**	**Y-cg**	**Z-cg**	**Ixx**	**Iyy**	**Izz**	**Pxy**	**Pxz**	**Pyz**
In Orbit Test	3751.61	-71.6	322.3	2015.3	16585.6	8641.4	12694	58.8	-519.2	320.4
Year 1	3692.42	-72.8	327.5	2019.1	16541.1	8597.6	12681.2	60.2	-518.2	315.8
Year 2	3650.28	-73.6	331.3	2019.8	16517.3	8578.2	12675.5	61.2	-518	315
Year 3	3617.14	-74.3	334.3	2019.8	16499.6	8564	12670.9	62	-518	315
Year 4	3582.98	-75	337.5	2020	16480.8	8548.9	12666.1	62.8	-518	314.7
Year 5	3547.97	-75.7	340.8	2020.2	16461.7	8533.6	12661	63.7	-517.9	314.4
Year 6	3477.28	-77.3	347.8	2023.4	16412.6	8489.2	12647.3	65.6	-517.1	310.6
Year 7	3430.27	-78.3	352.5	2024.8	16384.5	8466.6	12640.1	66.9	-516.7	308.9
Year 8	3383.54	-79.4	357.4	2026	16357.4	8445	12632.7	68.2	-516.4	307.4
Year 9	3337.32	-80.5	362.4	2026.3	16333.4	8426.7	12625.1	69.5	-516.3	307.1
Year 10	3282.12	-81.9	368.5	2028.2	16301.3	8401.5	12615.6	71.2	-515.8	304.8
Year 11	3238.21	-83	373.4	2030.6	16273.8	8379.7	12608	72.5	-515.1	301.9
Year 12	3195.9	-84.1	378.4	2037.1	16234.3	8345.9	12600.4	73.8	-513.4	294.1
Year 13	3155.35	-85.2	383.3	2044.6	16192.2	8309.3	12593	75.1	-511.4	285
Year 14	3116.67	-86.2	388	2051.6	16152.1	8274.7	12585.8	76.4	-509.5	276.5
Year 15	3071.52	-87.5	393.7	2060	16104.5	8233.7	12577.1	77.9	-507.2	266.4
RESIDUAL	3059.9	-87.8	395.2	2063.1	16087.8	8216	12572.2	78.4	-506.4	262.6
Hydrazine	183.88	0	0	1559.8	106.9	106.9	6.3	0	0	0
Oxidizer	11.77	0	0	788.7	4.8	11.8	7	0	0	0
East Ox	5.88	768.3	0	788.7	2.4	2.4	0	0	0	0
West Ox	5.88	-768.3	0	788.7	2.4	2.4	0	0	0	0
Pressurant	6.9	-0.2	0	1227.2	4.1	4.8	1.2	0	0	0

Electrical Power Subsystem

Solar Array	Single axis sun tracking	
Cell type	Spectrolab Ultra triple junction (GaInP2/GaAs/Ge)	
Panels	5 panels, 135.7 cm x 392.3 cm each	
Redundancy	16 for 15 circuits	
Power	Solar Array Output	Satellite Load
BOL summer solstice	5177 W	3748 W
BOL autumnal equinox	5956 W	4605 W
EOL summer solstice	4830 W	3535 W
EOL autumnal equinox	5489 W	4530 W
Batteries	2 lithium ion batteries, 36 cells each	
Cell configuration	3 parallel cells per bank, 12 series banks	
Redundancy	23 for 24 cell banks	
Capacity	170 Wh/cell	
Depth of Discharge	< 60% of measured capacity	
Eclipse load	4650 W BOL, 4410 W EOL, max 72 min eclipse	
70V Bus Voltage	70 V ± 0.6 V at regulation point	
Used for housekeeping and Auxiliary Communications	70 V +0.6 V/–2.0 V at source	
28V Bus Voltage	29.3 ± 0.6 V at source	
Used for Instruments	29.3 +0.6 V/–3.0 V at load	

Propulsion Design

Propellant	Bipropellant
Tank volumes/ capacity	
Fuel – Hydrazine	1704.7 L (60.2 ft3) / 1637 kg (3609 lbm)
Oxidizer – Nitrogen Tetroxide	657.0 L (23.2 ft3) / 900 kg (1984 lbm)
Pressurant - Helium	167.1 L (5.9 ft3)
Total Propellant Mass Loaded	
Fuel (1)	1626 kg (3584 lbm)
Oxidizer (2)	700 kg (1543 lbm)
Helium (2)	7.3 kg (16.0 lbm)
Thrusters	
LAE (1)	445 N (100 lbf)
HBT (2)	22 N (5 lbf)
REA (8)	22 N (5 lbf)
LTR (16)	90 mN (20 mlbf)
Arcjets (4)	225 mN (50 mlbf)

Guidance Navigation & Control – GOES-R Performance

Attitude Knowledge	
Static	569.6 μrad 3σ per axis
Slow Dynamic	26 μrad 3σ per axis
Dynamic	11.8 μrad 3σ per axis
Integrated Rate Error	
1 Sec	0.9 μrad 3σ X/Y axis; 0.89 μrad 3σ Z axis
30 Sec	1.16 μrad 3σ X/Y axis; 1.23 μrad 3σ Z axis
300 Sec	4.9 μrad 3σ per axis
900 Sec	12.0 μrad 3σ per axis
Orbit Knowledge	
In-Track Position	10.1 m 3σ
Cross-Track Position	11.6 m 3σ
Radial Position	51.3 m 3σ
Velocity	2.4 cm/sec 3σ per axis
Pointing Accuracy	184.5 μrad 3σ per axis
Pointing Stability, 60 sec	215.3 μrad 3σ per axis
Attitude Rate Error	+/-37 μrad/s 3σ per axis, based upon 15 msec

Thermal Control Subsystem

Nominal Spacecraft Internal Dissipation Thermal Load BOL	~1400 W
Nominal Spacecraft Internal Dissipation Thermal Load EOL	~1526 W
Primary heat rejection	Primary heat rejection Aluminum honeycomb panels with embedded heat pipes, covered with OSRs
Heater Control	247 Spacecraft heaters FSW controlled by OBC

Command (Command Data Acquisition (CDA))

Receive Characteristics

Uplink frequency	2034.200 MHz
Minimum G/T (On-Station)	-33 dB/K
Minimum G/T (Safehold Mode)	-59 dB/K over 95% spherical coverage
Dynamic range (4 ksps)	-120 dBm to -50 dBm (Referenced to Command Receiver input)
Dynamic range (64 ksps)	-108 dBm to -50 dBm (Referenced to Command Receiver input)

Modulation and Data Rate

Command modulation	Direct BPSK
Command data rate (uncoded)	3.5 ksps or 56 ksps
Command data rate (coded)	4 ksps or 64 ksps
Bit error rate (after decoding)	≤ 1E-05

Command (Orbit-Raising Telemetry Tracking and Command (ORTT&C))

Receive Characteristics

Uplink frequency	2036.000 MHz
Polarization (Orbit-Raising/On-Station using Hemis)	RHCP
Polarization (Safehold Mode using Hemis)	RHCP
Polarization (Orbit-Raising using Bicone)	Linear
Minimum G/T (On-Station using Hemis)	-42 dB/K
Minimum G/T (Safehold Mode using Hemis)	-52 dB/K over 75% spherical coverage
Minimum G/T (Orbit-Raising using Bicone)	-48 dB/K
Dynamic range (1 ksps) (Referenced to Command Receiver input)	-121 dBm to -50 dBm
Dynamic range (4 ksps) (Referenced to Command Receiver input)	-115 dBm to -50 dBm

Modulation and Data Rate

Command modulation	BPSK on Subcarrier
Subcarrier modulation	16 kHz subcarrier phase modulated on carrier
Command data rate (uncoded)	875 sps or 3.5 ksps
Command data rate (coded)	1 ksps or 4 ksps
Bit error rate (after decoding)	≤ 1E-05

Telemetry (Command Data Acquisition (CDA)

Transmit Characteristics	
Downlink frequency	1693.000 MHz
Polarization (On-Station using L/S-Band EC Antenna)	RHCP
Polarization (On-Station using Hemis)	RHCP
Polarization (Safehold Mode using Hemis)	RHCP
Minimum EIRP (4 ksps)	25 dBmi
Minimum EIRP (40 ksps)	33 dBmi
Modulation and Data Rate	
Telemetry modulation	Direct BPSK
Telemetry data rate (uncoded)	3.4375 ksps or 34.375 ksps
Telemetry data rate (coded)	4 ksps or 40 ksps
Bit error rate (after decoding)	≤ 1E-07

Telemetry (Orbit-Raising Telemetry Tracking and Command (ORTT&C))

Transmit Characteristics	
Downlink frequency	2211.040 MHz
Polarization (Orbit-Raising/On-Station using Hemis)	RHCP
Polarization (Safehold Mode using Hemis)	RHCP
Polarization (Orbit-Raising using Bicone)	Linear
Minimum EIRP (On-Station using Hemis)	26 dBmi
Minimum EIRP (Safehold Mode using Hemis)	24 dBmi over 75% spherical coverage
Modulation and Data Rate	
Telemetry modulation	BPSK on Subcarrier
Subcarrier modulation	1.024 MHz Subcarrier Phase Modulated on Carrier
Telemetry data rate (uncoded)	
Telemetry data rate (coded)	1 ksps or 4 ksps
Bit error rate (after decoding)	≤ 1E-05

Tracking

Tracking Characteristics	
Method	Turnaround tone ranging
Turnaround frequency ratio	240/221
Maximum spacecraft ranging signal delay	8000 nsec
Spacecraft ranging signal delay uncertainty	±40 nsec
Receive Characteristics	
Uplink frequency	2036.000 MHz
Polarization (Orbit-Raising/On-Station using Hemis)	RHCP
Polarization (Safehold Mode using Hemis)	RHCP
Polarization (Orbit-Raising using Bicone)	Linear
Transmit Characteristics	
Downlink frequency	2211.040 MHz
Polarization (Orbit-Raising/On-Station using Hemis)	RHCP
Polarization (Safehold Mode using Hemis)	RHCP
Polarization (Orbit-Raising using Bicone)	Linear

Raw Data Link (RDL)

Transmit Characteristics	
Downlink frequency	8220.000 MHz
Polarization	Linear-V or Linear-H
Minimum antenna gain (includes pointing error)	33.65 dBi
Maximum antenna gain	37.0 dBi
Antenna coverage	Gimbaled to provide coverage to WCDAS and RBU
Minimum EIRP (to WCDAS/RBU from 137 deg W)	70.3 dBmi
Minimum EIRP (to WCDAS/RBU from 75 deg W)	69.6 dBmi
Modulation and Data Rate	
Transmit modulation	OQPSK
Transmit data rate (uncoded)	105 Mbps
Transmit data rate (coded)	120 Mbps
Transmit bandwidth	≤ 130 MHz
Bit error rate (after decoding)	≤ 1E-12

GOES Re-Broadcast (GRB)

Receive Characteristics	
Uplink frequency	7216.600 MHz
Polarization	Linear-V and/or Linear-H
Minimum antenna gain (includes pointing error)	33.2 dBi
Maximum antenna gain	N/A
Antenna coverage	Gimbaled to provide coverage to WCDAS and RBU
Minimum G/T	3.6 dB/K
Dynamic range	-103.4 dBmi to -92.1 dBmi
Transmit Characteristics	
Downlink frequency	1686.600 MHz
Polarization	RHCP and/or LHCP
Minimum antenna gain (includes pointing error)	14.8 dBi
Maximum antenna gain	17.7 dBi
Antenna coverage	Earth coverage
Minimum EIRP	60.3 dBmi at EOC
Modulation and Data Rate	
Modulation	8-PSK or QPSK
Data rate (uncoded) per polarization	15.5 Mpbs
Data rate (coded) per polarization	23.25 Mbps (8-PSK)
Channel bandwidth	≥ 11.6 MHz
Bit error rate (after decoding)	≤ 1E-10

Data Collection Platform Report (DCPR)

Receive Characteristics	
Uplink frequency	401.900 MHz (Dom) / 402.200 MHz (Int'l)
Polarization	RHCP
Minimum antenna gain (includes pointing error)	12.9 dBi
Maximum antenna gain	N/A
Antenna coverage	Earth coverage
Minimum G/T	-15.5 dB/K at EOC
Dynamic range	-133.5 dBmi to -110.6 dBmi
Transmit Characteristics	
Downlink frequency	1679.900 MHz (Dom) / 1680.200 MHz (Int'l)
Polarization	Linear
Minimum antenna gain (includes pointing error)	14.2 dBi
Maximum antenna gain	16.7 dBi
Antenna coverage	Earth coverage
Minimum EIRP	51.3 dBmi at EOC
Modulation and Data Rate	
Modulation	8-PSK
Data rate (uncoded) per carrier	300 bps or 1.2 kbps
Data rate (coded) per carrier	450 bps or 1.8 kbps
Channel bandwidth	≥ 400 kHz
Bit error rate (after decoding)	≤ 1E-06

Data Collection Platform Command (DCPC)

Receive Characteristics	
Uplink frequency	2032.775 MHz (East) / 2032.825 MHz (West)
Polarization	Linear
Minimum antenna gain (includes pointing error)	14.5 dBi
Maximum antenna gain	N/A
Antenna coverage	Earth coverage
Minimum G/T	-16.7 dB/K at EOC
Dynamic range	-120.2 dBmi to -107.1 dBmi
Transmit Characteristics	
Downlink frequency	468.775 MHz (East) / 468.825 MHz (West)
Polarization	RHCP
Minimum antenna gain (includes pointing error)	13.0 dBi
Maximum antenna peak-to-edge gain ratio	1.7 dB
Antenna coverage	Earth coverage
Minimum EIRP	47.2 dBmi at EOC
Modulation and Data Rate	
Modulation	BPSK with CDMA
Data rate (uncoded)	306.1 bps
Data rate (coded and chipped)	22.225 kbps
Channel bandwidth	≥ 90 kHz
Bit error rate (after decoding)	≤ 1E-05

High-Rate Information Transmission/Emergency Management Weather Information Network (HRIT/EMWIN)

Receive Characteristics	
Uplink frequency	2027.100 MHz
Polarization	Linear
Minimum antenna gain (includes pointing error)	14.5 dBi
Maximum antenna gain	N/A
Antenna coverage	Earth coverage
Minimum G/T	-16.7 dB/K at EOC
Dynamic range	-91.5 dBm to -76.7 dBm
Transmit Characteristics	
Downlink frequency	1694.100 MHz
Polarization	Linear
Minimum antenna gain (includes pointing error)	14.2 dBi
Maximum antenna peak-to-edge gain ratio	1.4 dB
Antenna coverage	Earth coverage
Minimum EIRP	56.8 dBmi at EOC
Modulation and Data Rate	
Modulation	BPSK
Data rate (uncoded)	400 kbps
Data rate (coded)	927 kbps
Channel bandwidth	≥ 1.2 MHz
Bit error rate (after decoding)	≤ 1E-08

Search and Rescue (SAR)

Receive Characteristics	
Uplink frequency	406.050 MHz
Polarization	RHCP
Minimum antenna gain (includes pointing error)	12.9 dBi
Maximum antenna gain	N/A
Antenna coverage	Earth coverage
Minimum G/T	-15.5 dB/K at EOC
Dynamic range	-149.7 dBmi to -124.7 dBmi
Transmit Characteristics	
Downlink frequency	1544.550 MHz
Polarization	RHCP
Minimum antenna gain (includes pointing error)	11.5 dBi
Maximum antenna gain	14.0 dBi
Antenna coverage	Earth coverage
Minimum EIRP	44.5 dBmi at EOC
Modulation and Data Rate	
Modulation	PM/BPSK
Data rate (uncoded)	400 bps
Data rate (coded)	N/A
Channel bandwidth	≥ 80 kHz
Bit error rate (uncoded)	≤ 5E-05

Advanced Baseline Imager

Field-of-View Defining Element	Detector
Focal Plane Module Field-of-View	
Visible & Near-IR	0.88° (NS) x 1.85° (EW)
Midwave IR	0.91° (NS) x 1.55° (EW)
Longwave IR	0.89° (NS) x 1.57° (EW)
Field-of-Regard	Ellipsoid – 20.5° (NS) x 22.7° (EW)
16-channel Imaging	Simultaneously
Scan Capability	**Scenes (Refresh Rate in Minutes)**
Mode 3	Full Disk (15), CONUS (5), Mesoscale (0.5)
Mode 4	Full Disk (5)
Custom	User-defined scenes and refresh rates
Channel (Wavelength) / Detectors	**Pixel Spacing**
Visible & Near-IR	
Band 1 (0.47 um) / Silicon	1 km
Band 2 (0.64 um) / Silicon	0.5 km
Band 3 (0.86 um) / Silicon	1 km
Band 4 (1.38 um) / HgCdTe	2 km
Band 5 (0.86 um) / HgCdTe	1 km
Band 6 (1.38 um) / HgCdTe	2 km
Midwave IR	
Band 7 (3.90 um) / HgCdTe	2 km
Band 8 (6.185 um) / HgCdTe	2 km
Band 9 (6.95 um) / HgCdTe	2 km
Band 10 (7.34 um) / HgCdTe	2 km
Band 11 (8.50 um) / HgCdTe	2 km
Longwave IR	
Band 12 (9.61 um) / HgCdTe	2 km
Band 13 (10.35 um) / HgCdTe	2 km
Band 14 (11.20 um) / HgCdTe	2 km
Band 15 (12.30 um) / HgCdTe	2 km
Band 16 (13.30 um) / HgCdTe	2 km
Radiometric Calibration	Space, internal blackbody, solar diffuser
Frequency of Calibration	
Space Look	≤ 30 seconds
Infrared Blackbody	15 minutes (Mode 3) / 5 minutes (Mode 4)
Solar Diffuser	On Demand
System Absolute Accuracy	
Bands 1 – 3, 5 – 6	± 3% @ 100 % Albedo
Band 4	± 4% @ 100% Albedo
Bands 7 – 16	± 1K @ 300 K

System Relative Accuracy	
Pixel-to-Pixel	<NEdT
Swath-to-Swath	<NEdT
Channel-to-Channel	<0.2 K
Image-to-Image	<0.2 K
Calibration	<0.2 K
Image Navigation and Registration	
Navigation	21 µrad
Registration	
Frame-to-Frame	
0.5 and 1.0 km	17.6 µrad
2.0 km	23.0 µrad
Within-Frame	21.0 µrad
Swath-to-Swath	7.8 µrad
Channel-to-Channel	
2km-to-0.5/1/2 km	11.2 mrad
1km-to-0.5/1km	6.0 mrad

GLM Design

Lens focal length	134 mm
Lens f number	1.2
Lens field of view	+/- 8 deg
CCD imaging area size	1372 x 1300 pixels
Pixel size (variable, up to)	30 x 30 µm
Well depth (variable)	2e6 electrons
Ground sample distance	8 – 14 km
Frame rate	500 fps
Filter center wavelength	777.4 nm
Filter band pass	1 nm
ADC resolution	14 bits
Event rate	≥1e5 sec-1
Downlink rate	7.7 Mbps
Mass (Total)	125 kg
Mass (Sensor Unit)	67 kg
Mass (Electronics Unit)	41 kg
Operational power	290 W
Flash detection efficiency	>80%
Operating life	≥10 years

EXIS Design

Parameter	Design
XRS λ Range	0.05 – 0.40 nm
0.10 – 0.80 nm	
XRS Dynamic Range	10-9 W/m2 – 10-3 W/m2
XRS SNR	>30:1 over 10 min. average
XRS Data Product Accuracy	14% over mission life
XRS Cadence	3 sec
EUVS λ Range	5- 127 nm (data product)
EUVS $\Delta\lambda$ Resolution	5 – 115 nm; 5 nm bins
117-127; 10nm bin	
EUVS SNR	>20:1 over 10 min. average
EUVS Data Product Accuracy	18% over mission life
EUVS Cadence	27 sec

SUVI Design

Mirrors	Multi-layer-coated Zerodur
Number of coating segments per mirror	6
Primary diameter	20 cm
Effective focal length	173.04 cm
Field of view	45 × 45 arcmin or better
Pixel size/Resolution	21 µm/2.5 arcsec
CCD detector	1280 × 1280 pixels
Detector full well	450 000 electrons
Full image frame rate	1 per 10 seconds
Typical exposure times	0.01 to 1 second
Mass:	
Telescope subsystem	39 kg
Electronics box	25 kg
Intra-instrument harness	8 kg
Instrument Power	225 W (peak)
Science telemetry	
Interface to spacecraft	3.5 Mbps
Design life	10 years (after 5 years of on-orbit storage)

Magnetometer Performance Summary

Dynamic Range	+/- 512 nT
Resolution	0.0016 nT
Accuracy	<1.7 nT
Noise	<0.1 nT RMS
Bandwidth	2.5 Hz
Sensor axes orthogonality	Within +/- 0.1 deg post calibration

Space Environment In-Situ Suite (SEISS) Performance Summary

Magnetospheric Particle Sensor - High Energy (MPS-HI)

Function	Measure flux of protons from 80 keV – 12 MeV and electrons from 50 keV – 12MeV
Sensor assembly	10 solid state silicon detector telescopes: 5 electron and 5 proton telescopes
	2 dosimeters
Energy bands	
Protons	11 energy bands from 80 keV – 12000 keV
Electrons	12 energy bands from 50 keV – 400 keV
	2 integral channels: >2000 keV and >4000 keV
Sampling rate	Once every 1 second
Field of view	30° cone per telescope, total 170° YZ plane
	180° per dosimeter, -Z direction

Magnetospheric Particle Sensor – Low Energy (MPS-LO)

Function	Measure flux of ions and electrons from 30 eV – 30 keV
Sensor assembly	2 sensor heads, each with 1 electron and 1 ion microchannel plate
Energy bands	
Ions	15 logarithmically spaced
Electrons	15 logarithmically spaced
Sampling rate	Once every 1 second
Field of view	180° YZ plane

Solar and Galactic Proton Sensor (SGPS)

Function	Measure flux of protons from 1MeV – 500 MeV and alpha particles from 4 MeV – 500 MeV
Sensor assembly	2 units, each with 3 solid state silicon detector telescopes
Energy bands	
Protons	14 front entry particles, 4 rear entry particles only
Alpha particles	12 front entry particles, 3 rear entry particles only
Sampling rate	Once every 1 second
Field of view	1 unit pointed +X, 1 unit pointed –X
	3 telescopes / unit: 2 at 60° cone, 1 at 90° cone XY plane

Energetic Heavy Ion Sensor (EHIS)

Function	Measure proton and heavy ion flux from 15-200 MeV / nucleon
	Measure individual elements from hydrogen to nickel in 30 mass bands
Sensor assembly	1 solid state silicon detector telescope
Energy bands	5 logarithmically spaced energy bands at each of 30 mass bands
Sampling rate	Full data set once per 60 seconds
Field of view	56° cone YZ plane

20. Acronyms

1-PPS	One Pulse per Second
2DS	2-Day Store
A	Angstrom
ABI	Advanced Baseline Imager
ACS	Antenna Controller System
ACU	Antenna Control Unit
AD	Attitude Determination
ADC	Analog to Digital Converter
ADC	Analog to Digital Conversion
ADIS	Angle Detecting Inclined Sensor
ADRS	Ancillary Data Relay System
AIA	Atmospheric Imaging Assembly
ANCF	AWIPS Network Control Facility
AS	Application Server
ASD	Acceleration Spectral Density
ASIC	Application Specific Integrated Circuit
ASIS	Antenna System Interface Simulators
ATS	Absolute Time Sequence
AVD	Active Vibration Damping
AWA	Antenna Wing Assembly
AWIPS	Advanced Weather Interactive Processing System
BCD	Battery Charger/Discharger
BDS	Best Detector Select
BIT/BITE	Built-In-Test/ Built-In-Test-Equipment
BNCF	AWIPS Backup Network Control Facility
BPSK	Binary Phase-Shift Key
BRF	Body Reference Frame
BS	Beamsplitter
C&DH	Command and Data Handling
CADU	Channel Access Data Units
CASSIE	Contextual Analysis for Spectral and Spatial Information
CBU	Consolidated Backup
CCA	Circuit Card Assembly
CCD	Charge Coupled Device
CCE	Cryocooler Control Electronics
CCTV	Closed Circuit Television
CCSDS	Consultative Committee for Space Data Systems
CDA	Central Distribution Assembly
CDA	Command and Data Acquisition

CDRL	Contract Data Requirements List
CDUA	Command Decryption Unit Assembly
CEB	Camera Electronics Box
CG	Center of Gravity
CI	Configuration Item
CLASS	Comprehensive Large Array-data Stewardship System
CM	Configuration Management
CMDB	Configuration Management Database
CME	Coronal Mass Ejection
CMI	Cloud and Moisture Imagery
CODT	Custom Object Dump Tool
COLA	Collision Avoidance
CONUS	Contiguous United States
COOP	Continuity of Operations
COSI	Common Operating System Image
CPE	Certified Principle Engineer
CS	Consolidated Storage
CSC	Computer Software Component
CSC	Computer Software Configuration
CSSA	Coarse Sun Sensor Assembly
CSU	Current Sensor Unit
CTE	Coeficient of Thermal Expansion
CTP	Command and Telemetry Processor
DB	Database
DC	Direct Current
DCP	Data Collection Platform
DCPC	Data Collection Platform Command
DCPR	Data Collection Platform Report
DCS	Data Collection System
DE	Development Environments
DF	Data Formater
DGS	Diego Garcia Station
DN	Digital Number
DO	Data Operations
DP	Data Processor
DPU	Data Processing Unit
DRGS	Direct Readout Ground Station
DVB-S2	Digital Video Broadcasting Satellite Second Generation
ECEF	Earth-Centered Earth-Fixed
EDAC	Error Detection and Correction
EEPROM	Electronically Erasable Programmable Read-Only Memory

EGSE	Electrical Ground Support Equipment
EHIS	Energetic Heavy Ion Sensor
EI	Enterprise Infrastructure
ELT	Emergency Locator Transmitter
EM	Enterprise Management
EMWIN	Emergency Managers Weather Information Network
EOCV	End of Charge Voltage
EOPP	Earth Orientation Prediction Parameters
EP	Encoder Processor
EPEAT	Electron, Proton, Alpha Detector
EPC	Electronic Power Converter
EPIRB	Emergency Position Indicating Radio Beacons
EPP	Earth Pointing Platform
EPS	Electrical Power Subsystem
ESB	Enterprise Service Bus
ESD	Electro-static discharge
ESPC	Environmental Satellite Processing Center
ESPDS	Environmental Satellite Processing and Distribution System
ETA	EUV Telescope Assembly
EU	Electronics Unit
EUV	Extreme Ultraviolet
EUVS	Extreme Ultraviolet Sensor
EW	East-West
EWSK	East-West Station Keeping
EXEB	EXIS Electrical Box
EXIS	Extreme Ultraviolet and X-ray Irradiance Sensors
FAA	Front Aperture Assembly
FBA	Fuse Board Assembly
FEP	Front End processors
FGF	Fixed Grid Frame
FIFO	First In, First Out
FM	Flight Model
FOV	Field of View
FPA	Focal Plane Arrays
FPAA	Focal Plane Array Assembly
FPGA	Field Programmable Gate Array
FPM	Focal Plane Module
FPP	Focal Plane Package
FSDE	Flight Software Development Environment
FSME	Flight Software Maintenance Environment
FSS	Fine Sun Sensor

FSSA	Fine Sun Sensor Assembly
FSW	Flight Software
FUV	Far Ultraviolet
FWHM	Full-Width Half-Maximum
GAS	GOES-R Access Subsystem
GEO	Geosynchronous Earth Orbit
GEOSAR	Geostationary Search and Rescue
GHe	Gaseous Helium
GLM	Geostationary Lightning Mapper
GN&C	Guidance Navigation and Control
GOES	Geostationary Operational Environmental Satellite
GPA	Ground Processing Algorithm
GPS	Global Positioning System
GPSR	Global Positioning System Receiver
GRATDAT	GOES-R ABI Trending and Data Analysis Toolkit
GRB	GOES Rebroadcast service
GRBT	GRB User Terminals
GRDDP	GOES-R Reliable Data Delivery Protocol
GS	Ground System
GSD	Ground Sample Distance
GTA	Guide Telescope Assembly
GTO	Geosynchronous Transfer Orbit
GUI	Graphical User Interface
GVAR	GOES VARiable
HBT	Hydrazine Bi-Propellant Thruster
HOPA	High Output Paraffin Actuator
HR	Hurricane-Rated
HRG	Hemispheric Resonating Gyros
HRIT	High Rate Information Transmission
HSIO	High Speed I/O
HWIL	Hardware In the Loop
Hz	Hertz
I&T	Integration and Test
IC	Instrument Controller
ICRF	International Celestial Reference Frame
ICT	Internal Calibration Target
IEEE	Institute of Electrical and Electronics Engineers
IETF	Internet Engineering Task Force
IFDS	Intermediate Frequency Distribution System
IFL	Inter-Facility Link
IFL	Intermediate Frequency

IMU	Inertial Measurement Unit
INFO	Information
INR	Image Navigation and Registration
IRE	Integrated Rate Error
IR	Infrared
IS	Infrastructure
Isp	Specific Impulse
ITE	Integration and Test Environment
JPSS	Joint Polar Satellite System
keV	Kilo Electron Volt
km	Kilometer
KPP	Key Performance Parameter
ksps	Kilo-Symbols per Second
KVM	Keyboard, Video and Mouse
LAE	Liquid Apogee Engine
LAN	Local Area Network
LASP	Laboratory for Atmospheric and Space Physics
LCFA	Lightning Cluster-Filter Algorithm
LCM	Low voltage Control Module
LED	Light Emitting Diode
LER	Lower Equipment Room
LHCP	Left Hand Circular Polarization
LHP	Loop Heat Pipe
LIS	Lightning Imaging Sensor
LIS/OTD	Lightning Imaging Sensor / Optical Transient Detector
LMC	LOS Motion Compensation
LMSSC	Lockheed Martin Space Systems Company
LNA	Low Noise Amplifiers
LOR	Launch and Orbit Raising
LOS	Line-of-Sight
LPM	Low voltage Power Module
LTR	Low Thrust REA
LV	Launch Vehicle
LVDS	Low-Voltage Differential Signal
LWIR	Longwave infrared
LZSS	Level Zero Storage Service
M&C	Monitor & Control
MA	Momentum Adjust
MAG	Magnetometer
MAGED	Magnetosphere Electron Detector
MAGPD	Magnetospheric Proton Detector

Mbps	Megabits per second
MCP	Microchannel Plates
MECO	Main Engine Cutoff
MEDA	Macintyre Electronic Design Associates, Inc
MES	Main Engine Start
MeV	Mega Electron Volt
MHz	MegaHertz
µrad	Microradian
MLI	Multi-Layer Insulation
MLS	Mission Life Store
MM	Mission Management
Mo/Si	Molybdenum/Silicon
MOST	Mission Operations Support Team
Mo/Y	Molybdenum-Yttrium
MPLS	Multi-Protocol Label Switching
MPS	Mission Planning and Scheduling
MPS-HI	Magnetospheric Particle Sensor-High energy range
MPS-LO	Magnetospheric Particle Sensor-Low energy range
MSKSim	Momentum and Station-Keeping Simulation
MUV	Middle Ultraviolet
MUX	Multiplexer
MW/LW	Midwave –Longwave
MWIR	Midwave infrared
MY	Minus Y
NASA	National Aeronautics and Space Administration
NBF	Narrow Band Filter
NCEI	National Centers for Environmental Information
NCWCP	NOAA Center for Weather and Climate Prediction
NEdT	Noise Equivalent delta Temperature
NESDIS	National Environmental Satellite, Data and Information Service
NF	Network Fabric
NOAA	National Oceanic and Atmospheric Administration
NOC	Network Operations Center
NPP	National Polar-orbiting Partnership
NS	North-South
NSOF	NOAA Satellite Operations Facility
NSSK	North South Station Keeping
nT	nanoTesla
N-WAVE	NOAA Science Network
NWS	National Weather Service
O&A	Orbit and Attitude

O&M	Operations & Maintenance
OAR	O&A Angular Rate
OBC	On Board Computer
OCCR	Operations Configuration Change Request
OD	Orbit Determination
OE	Operational Environment
OMC	Orbit Motion Compensation
OMT	Orthomode Transducer
OPC	Optical Port Cover
OPSA	Optical Port Sunshield Assembly
ORTT&C	Orbit-Raising Tracking, Telemetry and Control
OSL	Operational Support Location
OSPO	Office of Satellite and Product Operations
OSR	Optical Solar Reflector
OTS	Off-the-Shelf
OTD	Optical Transient Detector
P&TC	Peripheral and Thermal Control
PD	Product Distribution
PDA	Product Distribution and Access
PDB	Parameter Database
PDM	Power Distribution Module
PDU	Power Drive Unit
PG	Product Generation
PIFT	Predicted Interface Force and Torque
PKI	Public Key Infrastructure
PLEIADES	Post Launch Enhanced Image and Data Evaluation System
PLT	Post-Launch Test
PMD	Propellant Management Device
PMU	Personal Maintenance Unit
PPS	Pulse per second
PPZ	Product Processing Zone
PRA	Pyro Relay Assembly
PRT	Platinum Resistant Thermometer
PRU	Power Regulation Unit
PS	Power Supplies
PSU	Personal Safety Unit
PTR	Program Tracking Reports
PY	Plus Y
QE	Quantum Efficiency
QJ	Quad Junction
R&R	Restraint and Release

RAM	Random Access Memory
RDC	Relay Drive Card
RDL	Raw Data Link
REA	Rocket Engine Assembly
RF	Radio Frequency
RFI	Radio Frequency Interface
RHCP	Right Hand Circular Polarization
RIU	Remote Interface Units
RMC	Redundancy Management Card
RMS	Root Mean Square
ROIC	Read-Out Integrated Circuit
RTEP	Real Time Event Processors
RWA	Reaction Wheel Assembly
SADA	Solar Array Drive Assembly
SADE	Solar Array Drive Electronics Box
SAR	Search and Rescue
SARSAT	Search and Rescue Satellite-Aided Tracking
SAS	Solar Array Shunt
SAST	Spacecraft All-Software Testbed
SAWA	Solar Array Wing Assembly
SBF	Solar Blocking Filter
SCA	Solar Calibration Assembly
SCC	Solar Calibration Cover
SCN	Spacecraft Navigation
SCP	Stored Command Processing
SCT	Solar Calibration Target
SDA	Scan Drive Assembly
SDO	Solar Dynamics Observatory
SEB	Sensor Electronics Box
SEB	SUVI Electronics Box
SEGA	SPP Elevation Gimbal Assembly
SEISS	Space Environment In-Situ Suite
Sep Nuts	Separation Nuts
SERDES	SERializer-DESerializer
sFTP	secure File Transfer Protocol
SGC	Space Ground Communications
SGPS	Solar and Galactic Proton Sensors
SHM	Safe Hold Mode
SIMD	Scanner Interface & Motor Driver
SIU	Sun Pointing Platform Interface Unit, Sensor Interface Unit
SMA	Shape Memory Alloy

SMC	Spacecraft Motion Compensation
SMF	Single Mode Fiber
SMS-1	first Synchronous Meteorological Satellite
SNR	Signal to Noise Ratio
SNMP	Simple Network Management Protocol
SOCC	Satellite Operations Control Center
SOZ	Satellite Operations Zone
SPP	Sun Pointing Platform
SPS	Solar Position Sensor
SPS	Sun Pointing Subsystem
SRA	Slip Ring Assembly
SRAM	Static Random Access Memory
SRF	Solar Rejection Filter
SRS	Shock Response Spectra
SSD	Solid State Detector
SSIRU	Scalable Space Inertial Reference Units
SSPA	Solid State Power Amplifier
SSRD	Split Spool Release Device
STAR	Satellite Applications and Research
STS	SUVI Telescope Subsystem
SU	Sensor Unit
SUE	Sensor Unit Electronics
SUVI	Solar Ultraviolet Imager
SWA	Solar Wing Assembly
SWPC	Space Weather Prediction Center
SWRC	SpaceWire Router Card
TBA	Trailer Bearing Assembly
TCP/IP	Transmission Control Protocol/Internet Protocol
TDU	Thermal Dynamic Unit
TFRS	Timing and Frequency Reference System
TNCF	Test Network Control Facility
TNR	Threshold-to-Noise Ratio
TNT	Telemetry & Timing
TRMM	Tropical Rainfall Measuring Mission
TSU	Transient Suppression Unit
TT&C	Tracking, Telemetry, and Control
TWTA	Traveling Wave Tube Assembly
ULA	United Launch Alliance
USN	Universal Space Network
UTC	Coordinated Universal Time
UTJ	Ultra Triple Junction

VEM	Visco-Elastic Material
VIS/IR	Visible –Infrared
VNIR	Visible and Near Infrared
VP	Video Processors
VPN	Virtual Private Network
WAN	Wide Area Network
WCDAS	Wallops Command and Data Acquisition Center
WFO	Weather Forecast Office
XRS	X-Ray Sensor
LZSS	Level-0 Storage Solution